national treasury

Department:
National Treasury
REPUBLIC OF SOUTH AFRICA

RT233-2023

ANNEXURE 3B TECHNICAL SPECIFICATIONS
(for Additional Information)

SUPPLY AND DELIVERY OF WHEELCHAIRS, SEATING SYSTEMS, POSITIONERS AND COMMODES

(ONLY COMPLETE ANNEXURE 3A TECHNICAL SPECIFICATIONS AND PRICING SCHEDULE AS A RETURNABLE AND NOT THIS DOCUMENT)

Table of Contents

LIST OF FIGURES 4
LIST OF TABLES 4
LIST OF ABBREVIATIONS 4
1. CATEGORY 1 : WHEELCHAIRS AND COMMODES 5
1.1 INDOOR/ LOW-ACTIVE BASIC FOLDING FRAME WHEELCHAIRS 8
1.2 BASIC FOLDING FRAME, STANDARD BACK HEIGHT, LOW SLUNG SEAT 15
1.3 BASIC FOLDING FRAME, SEMI-RECLINER 21
1.4 BARIATRIC FOLDING FRAME WHEELCHAIRS 25
1.5 URBAN ACTIVE WHEELCHAIRS 29
1.6 HYBRID ACTIVE WHEELCHAIRS 42
1.7 RURAL ACTIVE CHAIRS – ADJUSTABLE 3-WHEELER 50
1.8 ADJUSTABLE POSTURE SUPPORT WHEELCHAIRS 53
1.9 MOTORISED FOLDING FRAME WHEELCHAIRS 62
1.10 MOTORISED HEAVY-DUTY RIGID FRAME WHEELCHAIRS 70
1.11 BUGGIES 74
1.12 PORTER WHEELCHAIRS 83
1.13 COMMODES 87
1.14 TRANSPORTERS 92
2. CATEGORY 2: WHEELCHAIR CUSHIONS AND FOAM 97
2.1 BASIC FOAM CUSHIONS 97
2.2 FLUID FILLED CUSHION 111
2.3 AIR FILLED CUSHIONS 113
2.4 COMPRESSED FOAM WEDGE 115
2.5 COMPRESSED FOAM SHEET 116
2.6 HIGH DENSITY FOAM SHEET 117
3. CATEGORY 3 : CUSHION COVERS 118
3.1 CUSHION COVERS FOR CONTOURED BASED, BASIC FOAM 118
3.2 CUSHION COVERS FOR CONTOURED BASED, BASIC FOAM EXTENDED LENGTH 126
3.3 CUSHION COVERS FOR STRAIGHT BASE, BASIC FOAM 134
3.4 CUSHION COVER FABRIC 142
3.5 FLUID FILLED CUSHION COVER 142
3.6 AIR FILLED CUSHION COVERS 142
4 CATEGORY 4 : WHEELCHAIR CUSHIONS WITH COVERS 143
4.1 BASIC FOAM CUSHIONS WITH NYLON COVERS 143

4.2 BASIC FOAM CUSHIONS WITH WATERPROOF COVERS 160
5 CATEGORY 5 : BACKREST SYSTEMS 178
5.1 TENSION ADJUSTABLE BACK 178
5.2 TENSION ADJUSTABLE BACKREST WITH RIGID HEIGHT ADJUSTABLE FULL-LENGTH LATERALS 180
5.3 RIGID ADJUSTABLE BACK WITH FULL LENGTH LATERAL SUPPORT 182
5.4 RIGID ADJUSTABLE BACK 185
5.5 ADJUSTABLE MODULAR BACK 187
5.6 LOW-COST MODULAR SEATING SYSTEM 189
5.7 TRUNK SIDE SUPPORT 191
5.8 BASE SEATING SYSTEMS 192
5.9 POSTURE SUPPORT SEAT SYSTEM 193
6 CATEGORY 6 : TRAY TABLES 195
6.1 TRAY TABLE, BASIC WOOD 195
6.2 TRAY TABLE, BASIC PLASTIC 196
7. CATEGORY 7 : POSITIONERS 197
7.1 SIDELYERS 197
7.2 PRONE WEDGES 199
7.3 STANDING FRAMES 200

LIST OF FIGURES

Figure 1: Basic Folding Wheelchair Frame 5

LIST OF TABLES

Table 1: Basic Folding Wheelchair Frame References 5
Table 2: Basic Folding Wheelchair Frame Parameters 6
Table 3: Size Range for Basic Folding Frame Wheelchairs 9
Table 4: Range of Sizes for Low Slung Seat 15
Table 5: Adjustable rigid frame 4-wheeler urban active wheelchair 38
Table 6: Hybrid Active Wheelchairs 42
Table 7: Tension Adjustable Back Size Ranges 178
Table 8: Tension Adjustable Backrest with Rigid Size Ranges 180
Table 9: Rigid Adjustable Back with full length Size Ranges 182
Table 10: Upper Thoracic Height Measurements 183
Table 11: Shoulder Height Measurements 183
Table 12: Rigid Adjustable Back Sizes 185
Table 13: Adjustable Modular Back Size Ranges 187
Table 14: Low-Cost Modular Seating System Size Ranges 189

LIST OF ABBREVIATIONS

600 D	600 Denier
cm	Centimeters
CoG	Centre of Gravity
HDPE	High Density Polyethylene
PU	Poly Utherane
PVC	Polyvinyl Chloride
EVA	Ethylene Vinyl Acetate Foam

1. CATEGORY 1 : WHEELCHAIRS AND COMMODES

Figure 1: Basic Folding Wheelchair Frame

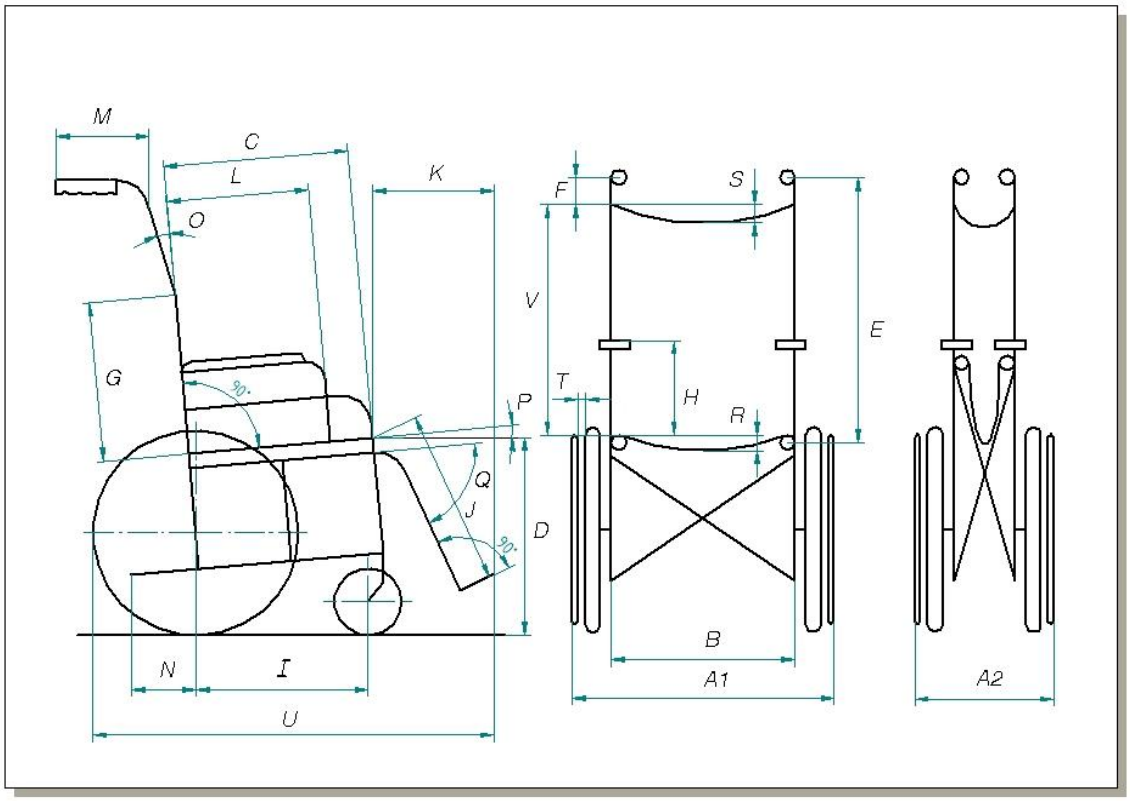

Table 1: Basic Folding Wheelchair Frame References

A1	Total width of wheelchair when opened
A2	Total width of wheelchair when folded
B	Seat width measured from outside of one seat rail to outside of opposite seat rail
C	Seat length measured from front of back post to front of seat upholstery. (Allow + 1 cm)
D	Front seat height (Allow + 1 cm, but left = right, no variance tolerance allowed) Measured from floor to front end of seat rail at point where upholstery ends
E	Hand grip to seat frame height
F	Height from top of back rest to center of handle
G	Height of back post bend measure from top of seat rail to bend in back post. (Allow + 1 cm)
H	Arm rest height (Allow + 1 cm)
I	Wheelbase (Allow + 1 cm)
J	Footrest height adjustment range (Allow + 1 cm)
K	Maximum footrest protrusion
L	Arm pad length (Allow + 1 cm)
M	Length of hand grip bar
N	Range of tipping lever projection
O	Angle of bend of back post = 8 - 10 degrees
P	Seat tilt: 5 degrees minimum and 8 degrees maximum (Approximate minimum of 3.5 cm and maximum of 5.7 cm front and rear seat height differential on 40 cm seat length)
Q	Angle of footrest hanger to seat = 75 degrees
R	Seat sag (maximum)
S	Back sag
T	Push rim clearance (Allow + 0.5 cm)
U	Overall length (Maximum, with footrest set fully extended, allowing 5 cm clearance from the ground)
V	Back upholstery height (measured from top of seat rail to top of back rest upholstery)

Table 2: Basic Folding Wheelchair Frame Parameters

		30cm Child's W/C	Standard Back	Tall Back	Short back	Low slung	Short back	Semi Recliner
A1	**Total width of wheelchair when opened**							
A2	**Total width of wheelchair when folded**							
B	**Seat Width**	As per item spec[1]	As per item spec	As per item spec	As per item spec	As per item spec	As per item spec	As per item spec
C	**Seat Length (Allow +1cm)**	33cm	41cm	41cm	41cm	41cm	41cm	41cm
D	**Front seat height (Allow +/-1cm)**	51cm	51cm	51cm	51cm	46cm	46cm	51cm
G	**Height of back post bend (Allow +/-1cm)**	15cm	23cm	33cm	none	23cm	none	none
H	**Armrest height (Allow +/-1cm)**							
	Desk and full arms	Not applicable	24cm	24cm	24cm	24cm	24cm	24cm
	Sport Arms	Not applicable	20cm	20cm	20cm	20cm	20cm	20cm
	Height Adjustable	16-32cm	16-32cm	16-32cm	16-32cm	16-32cm	16-32cm	16-32cm
I	**Wheelbase (Allow +/-1cm)**	37cm	44cm	44cm	44cm	44cm	44cm	50cm
J	**Footrest Adjustment (Allow +/-1cm)**							
	Long	Not applicable	35-50cm	35-50cm	35-50cm	35-45cm	35-45cm	35-50cm
	Medium	Not applicable	30-40cm	30-40cm	30-40cm	30-40cm	30-40cm	30-40cm
	Short	Not applicable	25-30cm	25-30cm	25-30cm	25-30cm	25-30cm	25-30cm
	90degree	17-25cm	17-25cm	17-25cm	17-25cm	17-25cm	17-25cm	17-25cm
K	**Maximum footrest protrusion**	12cm	40cm	40cm	40cm	40cm	40cm	40cm
L	**Arm pad length (Allow +/-1cm)**							
	Desk	27cm	27cm	27cm	27cm	27cm	27cm	27cm
	Full	37cm	37cm	37cm	37cm	37cm	37cm	37cm
	Sport	19cm	19cm	19cm	19cm	19cm	19cm	19cm

[1] Spec means Technical Specification

		30cm Child's W/C	Standard Back	Tall Back	Short back	Low slung	Short back	Semi Recliner
N	**Tipping lever projection**	16cm	17cm	17cm	17cm	17cm	17cm	12cm
O	**Bend in back post**	8-10 degrees	8-10 degrees	8-10 degrees	0 degrees	8-10 degrees	8-10 degrees	0 degrees
P	**Seat tilt**	5-8 degrees	5-8 degrees	5-8 degrees	5-8 degrees	5-8 degrees	5-8 degrees	5-8 degrees
Q	**Footrest angle to seat**	90 degrees	75 degrees	75 degrees	75 degrees	75 degrees	75 degrees	75 degrees
R	**Seat Sag (Maximum)**	2cm	2cm	2cm	2cm	2cm	2cm	2cm
S	**Back sag**	1cm	1cm	1cm	1cm	1cm	1cm	1cm
T	**Push-rim clearance (+/-5mm)**	2cm	2cm	2cm	2cm	2cm	2cm	2cm
U	**Overall length (Maximum, with footrest set fully extended, allowing 5cm clearance from the ground)**	78cm	114cm	114cm	114cm	110cm	110cm	120cm
V	**Back upholstery height**	32cm	42cm	52cm	32cm	42cm	32cm	55cm
	Head rest extension height	Not applicable	Not applicable	Not applicable	Not applicable	Not applicable	Not applicable	25cm

1.1 INDOOR/ LOW-ACTIVE BASIC FOLDING FRAME WHEELCHAIRS

1.1.1 BASIC FOLDING FRAME, STANDARD BACK HEIGHT

Size range:

- 51 cm (20") wide
- 46 cm (18") wide
- 43 cm (17”) wide
- 41 cm (16") wide
- 38 cm (15") wide
- 36 cm (14") wide
- 30 cm (12") wide with 40 cm seat frame length
- 30 cm (12") wide with 30 cm seat frame length
- 25 cm (10”) wide with 30 cm seat frame length

1.1.2 BASIC FOLDING FRAME, TALL BACK HEIGHT

Size range:

- 51 cm (20") wide
- 46 cm (18") wide
- 43 cm (17") wide
- 41 cm (16") wide
- 38 cm (15") wide
- 36 cm (14") wide
- 30 cm (12") wide with 40 cm seat frame length
- 30 cm (12") wide with 30 cm seat frame length

1.1.3 BASIC FOLDING FRAME, SHORT BACK HEIGHT

Size range:

- 51 cm (20") wide
- 46 cm (18") wide
- 43 cm (17”) wide
- 41 cm (16") wide
- 38 cm (15") wide
- 36 cm (14") wide
- 30 cm (12") wide with 40 cm seat frame length
- 30 cm (12”) wide with 30 cm seat frame length
- 25 cm (10”) wide with 30 cm seat frame length

Backrest / Seat configuration:

- Seat tilt: 5 degrees minimum and 8 degrees maximum (approximate minimum of 3.5cm and maximum of 5.7cm front and rear seat height differential, on 40cm seat length).
- Back to seat angle not to exceed 90 degrees.
- 8-10 degrees bend in back post, except for short back and low-slung short back subcategories.
- Back height: see Table 3 for measurements.
- Seat length:
  - ✓ Standard = 40cm (allow + 1cm) long on all wheelchairs with 40cm seat frame. Exception: 30cm (allow + 1cm) long on 30cm (12") wide with 30cm seat. Frame length: 25cm (10") wide with 30cm seat. Frame length; 25cm (10") wide with 25cm seat frame length. Shorter length may be specified by end user.

Table 3: Size Range for Basic Folding Frame Wheelchairs

Size (width)	**Standard back height** Tolerance (+/- 1cm)	**Tall back height** Tolerance (+/- 1cm)	**Short back height** Tolerance (+/- 1cm)
51 cm (20")	45 cm	55 cm	35 cm
46 cm (18") (cover range 43 cm (17") to 46 cm (18"))	45 cm	55 cm	35 cm
41 cm (16") (cover range 38 cm (15") to 41 cm (16"))	45 cm	55 cm	35 cm
36 cm (14")	45 cm	55 cm	35 cm
30 cm (12") wide with 40 cm seat frame length	45 cm	55 cm	35 cm
30 cm (12") wide with 30 cm seat frame length	35 cm	45 cm	Not applicable
25 cm (10") wide with 30 cm seat frame length	32-33 cm	Not applicable	Not applicable

Upholstery:

- Back upholstery: Nylon (600 D or stronger) or vinyl:
  Exception - Reinforced on all 20" or reinforced 18" and 16" wheelchairs. Reinforcement by means of a single nylon strip, at least 4cm wide stitched to outside of back upholstery.
- Seat upholstery: Nylon (600 D or stronger) or vinyl (40cm long or any shorter length as specified).
- All back and seat upholstery to be reinforced with an inner Polyvinyl Chloride (PVC) minimum technical specification of 500g/m².The inner coated PVC to have a minimum tensile strength of 200kg/50mm (WMD) and 160kg/50mm (AMD) and minimum tear strength of 25kg both WMD and AMD. (Reinforced wheelchairs as specified will therefore have a second, outer layer of PVC for additional reinforcement. (Reinforcement by means of strips not acceptable).

Armrests:

- Removable or fold-away, sport, full or desk with metal or durable plastic skirt guard. Exception: Height adjustable full or desk, with metal or durable plastic skirt guard only on 30cm (12") wide with 30cm seat frame length and 10” wheelchairs.
- Arm rest sockets to be on side of seat rail only.
- Shape of arm rests may in no way impede the fitting of commercial rigid adjustable back systems onto back posts.

Castors and forks:

- 8x2" (20cm x 5cm) castors with plastic hub, outer, shore hardness of 65-70 and inner, shore hardness of 33-70, with the inner value not exceeding the outer value. Exception: 20” wheelchair - 8x2" (20cm x 5cm) castors with aluminium hub, and outer, shore hardness of 65-70 and inner, shore hardness of 33-70, with the inner value not exceeding the outer value. Alternative, 8x2” (20cm x 5cm) rubber castors.
- 8x1” (20cm x 2.5cm) castors with plastic hub to be available as an option on request.
- Forks to be minimum 0.4cm thick mild steel. Stem to be fastened to the fork with a thread and nut system to allow for re-fastening.

Rear wheels and axles:

- 24" x 1 3/8 mag (standard) or spoke (optional) wheel with one-part semi-solid tyre as specified by end user.
  Exception, 12” wheelchair with 30cm seat frame length as well as 10” wheelchair, to use 22” x 1 3/8 mag (standard) or spoke (optional) wheel complete with semi-solid one-piece tyre.
- Axle 1.2cm thick.

Footrest hangers: with 2cm variance

- Extra-short (approximately 15cm), short (20cm), long (25cm) or fully detachable 90 degrees hangers with height, angle adjustable and reversible footplates as specified by end user.

Footrest:

- Footplate to be hard heavy-duty plastic, aluminium, or mild steel
- Height adjustable.

Leg strap:

- Nylon strap (4cm to 5cm wide) with hook and loop fasteners. The leg strap should have hook and loop fasteners fitted to its full length to allow maximum adjustability.

Frame:

- Basic, non-adjustable folding frame.
- Finish: Epoxy coated.

Guarantee:

- Frame and crossbars guaranteed for a minimum of 2 years from date of issue to end user.

Weight:

- Not to exceed 23kg (complete). With rubber castors, allow +1 kg.
- Not to exceed 16kg for 8” & 10” wheelchair. With rubber castors allow +1 kg.

Weight of user:

- Visibly marked on each wheelchair to indicate maximum weight load of end user.

Repair / tool kit:

- 4 rear wheels: bearings
- 4 castors: axle bearings
- 4 castor stem bearings
- 4 seat guides (where applicable)
- Adjustment tool

General requirements:

- Bidder must be able to provide wheelchair with all abovementioned options. The end user will specify the desired option at the time of procuring. The different options available within each technical specification description must be fully interchangeable and available at the same price. Where the end user does not specify options, the wheelchair will be issued as in the option given first for the categories with more than one option.
- No part or component may be changed deviate from the technical specifications set out in this document.
- Bidder to submit accredited test report to ensure device durability

1.1. C CUSTOMISING OPTIONS FOR INDOOR / LOW ACTIVE BASIC FOLDING FRAME WHEELCHAIRS

1.1. C.1 One arm drive unit

To be fitted onto the rear axle of the frame and should allow for propulsion of the wheelchair with either left or right hand only. The mounting frame or block should allow for positioning of the rear wheel axle to be in front of the original axle position. The connecting unit between the rear wheels should be a solid bar and have a quick release action to allow removal before folding the wheelchair. The concertina type connecting bar will not be accepted. This option must fit onto items 1.1-1.3.

1.1. C.2 Anti-tip levers (pair)

Removable, length adjustable extensions that fit onto the tipping levers of the side frame to prevent backwards tipping of wheelchair; quick release mechanism; must be able to be mounted with anti-tip castor facing either down or up. This option must fit onto items 1.1-1.3. As specified by end user

1.1. C.3 Amputation extension (pair)

Removable extension brackets that can be fitted onto side frames and tipping levers to allow the rear wheels to be mounted 5 cm (+/- 1 cm) back from original setting. This option must fit onto items 1.1-1.3.

1.1. C.4 45cm and 47.5cm seat extension

45cm and 47.5cm seats, with seat frame extension kit and full-length extended seat upholstery (short strip of upholstery not allowed) to lengthen original seat frames and seat. Upholstery screws to be provided. This option must fit onto items 1.1-1.3. and should be available in the full wheelchair width range.

1.1 C.5 Height adjustable desk armrest

Height adjustable desk armrests, removable/foldaway, complete with mild steel or durable plastic skirt guard to fit basic folding frame manual wheelchair. Length 40 cm, height adjustment range 160-320mm (Range is measured from seat). This option must fit onto items 1.1-1.3. As specified by end user

1.1. C.6 Nylon skirt guard (pair)

Nylon skirt guards (15cm high x 25cm long) to be fitted onto seat and back of wheelchair to protect clothes from dirt on wheels when no armrests are used. This option must fit onto items 1.1-1.3. As specified by end user

1.1. C.7 Bolt on footrest (pair)

Small footplate (15 x 13cm) without hanger, with attachment to be fitted directly onto front post of side frame of wheelchair. This option must fit onto items 1.1-1.3.

1.1. C.8 Elevating footrest hanger (pair)

Angle of footrest hanger to be adjustable between 0 degrees and 70 degrees of knee flexion; Height adjustable calf support; fitted with adult, narrow or juvenile footplates as specified by end user. To be ordered as a pair. This option must fit onto items 1.1-1.3.

1.1. C.9 Elevating footrest hanger (individual)

Angle of footrest hanger to be adjustable between 0 degrees and 70 degrees of knee flexion; Height adjustable calf support; Fitted with adult, narrow or juvenile footplates as specified by end user. To be ordered as an individual item specified Left or Right. This option must fit onto items 1.1-1.3.

1.1 C.10 Footrest with 90 degrees hangers

Footplate of footrests with 90 degrees hangers only in aluminium/mild steel or hard heavy-duty plastic, must be height, angle and forward/backward adjustable.

1.1. C.11 Rear wheels

1.1. C.11.a 24 x 1 3/8 spoke wheel (pair)

24 x 1 3/8 rear wheel rim with spokes, mild steel, complete with semi-solid one-piece tyre. This option must fit onto items 1.1-1.3, excluding 12” wheelchairs with 30cm seat frame length and 10” wheelchairs.

1.1. C.11.b 24 x 1¾ spoke wheel (pair)

24 x 1¾ rear wheel rim with spokes, mild steel, complete with semi-solid one-piece tyre. This option must fit onto items 1.1-1.3, excluding 12” wheelchairs with 30cm seat frame length and 10” wheelchairs.

1.1. C.11.c 22 x 1 3/8 spoke wheel (pair)
22 x 1 3/8 rear wheel rim with spokes, mild steel, complete with semi-solid one-piece tyre. This option must fit onto items 1.1-1.3; to fit only 12” wheelchairs with 30cm seat frame length and 10” wheelchairs.

1.1. C.12 Front castors
1.1. C.12.a 20 x 5 cm (8 x 2”) castor with Aluminium hub (pair)
8x2" (20 x 5cm) castors with plastic hub, outer shore hardness of 65-70 and inner,, shore hardness of 33-70, with the inner value not exceeding the outer value. This option must fit onto items 1.1-1.3.

1.1. C.12.b 20 x 2.5 cm (8 x 1”) castor with plastic hub (pair)
20 x 2.5cm (8 x 1”) castor with plastic hub and rubber tyre. This option must fit onto items 1.1-1.3.

1.1. C.12.c 20 x 5 cm (8 x 2”) castor with plastic hub (pair)
8x2" (20 x 5cm) castors with plastic hub, outer shore hardness of 65-70 and inner shore hardness of 33-70, with the inner value not exceeding the outer value. This option must fit onto items 1.1-1.3.

1.1. C.13 Quick-release axle for rear wheel
12 mm or 12.7 mm axle with release mechanism to allow for easy removal of the rear wheel. When in place must secure the rear wheel to allow for normal propulsion without limiting wheel rotation.
This option must fit onto items 1.1-1.3.

1.1 C.14 Head support, adjustable, basic occipital support only
Easily removable
Height and depth adjustable
Kidney shaped head support flexible and rake adjustable
Padded and covered in heavy gauge, removable, washable fabric.
This option must be compatible with option 1.1.C.16 and also fit on items 1.1-1.3

1.1.C.15 Head support, complex adjustable (hand shaped)
Easily removable
Height and depth adjustable
4-point, hand shaped head support, flexible and rake adjustable
Moulded and padded Single Vehicle Approval (EVA)
This option must be compatible with option 1.1.C.16 and also fit on items 1.1-1.3

1.1. C.16 Removable universal head rest with horizontal mounting bar
Universal bar that attaches in a horizontal position onto the back post/handles of the wheelchair to be fitted with a removable head rest. Mounting to the wheelchair: quick release mechanism to allow folding of wheelchair. Secure attachment to ensure safety when used as push handle.
Mount for head rest: Adjustable mount to allow 4cm +- 1cm offset left and right from central position. Should be adjustable. This option must fit onto items 1.1-1.3.

1.1. C.17 Sport armrest (pair)
Removable/foldaway sport armrest, with durable plastic skirt guard. This option must fit onto items 1.1-1.3 and should be available in each size.

1.1. C.18 Full armrest (pair)
Removable/foldaway full armrest with durable plastic skirt guard. This option must fit onto items 1.1-1.3 and should be available in each size

1.1. C.19 Desk armrest (pair)
Removable/foldaway desk armrest with durable plastic skirt guard. This option must fit onto items 1.1-1.3 and should be available in each size

1.1. C.20 Standard Backrest, Standard height
Back upholstery: Nylon (600 D or stronger) or vinyl: Exception: Reinforced on all 20” or reinforced 18” and 16” wheelchairs. Reinforcement by means of a single nylon strip, at least 4cm wide stitched to outside of back upholstery.

Back upholstery to be reinforced with an inner PVC minimum technical specification of 500 g/m². The inner coated PVC to have a minimum tensile strength of 200 kg/50mm WMD and 160kg/50mm AMD and a minimum tear strength of 25kg both WMD and AMD. (Reinforced wheelchairs as specified will therefore have a second, outer layer of PVC for additional reinforcement. Reinforcement by means of strips not acceptable.)

1.1. C.21 Standard Backrest, Tall backrest height
Back upholstery: Nylon (600 D or stronger) or vinyl: Exception: Reinforced on all 20” or reinforced 18” and 16” wheelchairs. Reinforcement by means of a single nylon strip, at least 4cm wide stitched to outside of back upholstery.

Back upholstery to be reinforced with an inner PVC minimum technical specification of 500 g/m². The inner coated PVC to have a minimum tensile strength of 200 kg/50mm WMD and 160kg/50mm AMD and a minimum tear strength of 25kg both WMD and AMD. (Reinforced wheelchairs as specified will therefore have a second, outer layer of PVC for additional reinforcement. Reinforcement by means of strips not acceptable.)

1.1. C.22 Standard Backrest, Short backrest height
Back upholstery: Nylon (600 D or stronger) or vinyl: Exception: Reinforced on all 20” or reinforced 18” and 16” wheelchairs. Reinforcement by means of a single nylon strip, at least 4cm wide stitched to outside of back upholstery.

Back upholstery to be reinforced with an inner PVC minimum technical specification of 500 g/m². The inner coated PVC to have a minimum tensile strength of 200 kg/50mm WMD and 160kg/50mm AMD and a minimum tear strength of 25kg both WMD and AMD. (Reinforced wheelchairs as specified will therefore have a second, outer layer of PVC for additional reinforcement. Reinforcement by means of strips not acceptable.)

1.2 BASIC FOLDING FRAME, STANDARD BACK HEIGHT, LOW SLUNG SEAT

Size range:

- 51 cm (20") wide
- 46 cm (18") wide
- 43 cm (17”) wide
- 41 cm (16") wide
- 38 cm (15") wide
- 36 cm (14") wide
- 30 cm (12") wide with 40 cm seat frame length
- 30 cm (12”) wide with 30 cm seat frame length
- 25 cm (10”) wide with 30 cm seat frame length

Backrest / Seat configuration:

- Seat tilt: 5 degrees minimum and 8 degrees maximum (approximate minimum of 3.5cm and maximum of 5.7cm front and rear seat height differential on 40cm seat length).
- Back to seat angle not to exceed 90 degrees.
- 8-10 degrees bend in back post, except for short back and low-slung short back categories.
- Back height: see Table 4 for measurements.
- Seat length:
  - ✓ Standard = 40cm (allow + 1cm) long on all wheelchairs with 40cm seat frame.
  - ✓ Exception: 30cm (allow + 1cm) long on 30cm (12") wide with 30cm seat frame length.
  - ✓ Shorter length may be specified by end user.

Table 4: Range of Sizes for Low Slung Seat

Size (width)	**Standard back height** Tolerance (+/- 1cm)	**Tall back height** Tolerance (+/- 1cm)	**Short back height** Tolerance (+/- 1cm)
51 cm (20")	45 cm	55 cm	35 cm
46 cm (18") (cover range 43 cm (17”) to 46 cm (18"))	45 cm	55 cm	35 cm
41 cm (16") (cover range 38 cm (15") to 41 cm (16"))	45 cm	55 cm	35 cm
36 cm (14")	45 cm	55 cm	35 cm
30 cm (12") wide with 40 cm seat frame length	45 cm	55 cm	35 cm
30 cm (12") wide with 30 cm seat frame length	35 cm	45 cm	Not applicable
25 cm (10") wide with 30 cm seat frame length	32-33 cm	Not applicable	Not applicable

Upholstery:

- Back upholstery: Nylon (600 D or stronger) or vinyl: Exception - Reinforced on all 20" or reinforced 18" and 16" wheelchairs. Reinforcement by means of a single nylon strip, at least 4cm wide stitched to outside of back upholstery.
- Seat upholstery: Nylon (600 D or stronger) or vinyl (40cm long or any shorter length as specified).
- All back and seat upholstery to be reinforced with an inner PVC minimum technical specification of 500 g/m². The inner coated PVC to have a minimum tensile strength of 200 kg/50mm WMD and 160kg/50mm AMD and a minimum tear strength of 25kg both WMD and AMD. (Reinforced wheelchairs as specified will therefore have a second, outer layer of PVC for additional reinforcement. Reinforcement by means of strips not acceptable).

Armrests:

- Removable or fold away sport, full or desk with metal or durable plastic skirt guard. Exception: Height adjustable full or desk with metal or durable plastic skirt guard only on 30cm (12") wide with 30cm seat frame length and 10" wheelchairs.
- Armrest sockets to be on side of seat rail only.
- Shape of arm rests may in no way impede the fitting of commercial rigid adjustable back systems onto back posts. As specified by end user

Castors and forks:

- 8x2" (20 x 5cm) castors with plastic hub, outer shore hardness of 65-70 and inner shore hardness of 33-70, with the inner value not exceeding the outer value. Exception: 20" wheelchair: 8x2" (20 x 5cm) castors with aluminium hub, and outer shore hardness of 65-70 and inner shore hardness of 33-70, with the inner value not exceeding the outer value. Alternative, 8x2" (20 x 5cm) rubber castors.
- 8x1" (20 x 2.5cm) castors with plastic hub to be available as an option on request.
- Forks to be minimum 4mm thick mild steel forks. Stem to be fastened to the fork with a thread and nut system to allow for re-fastening.

Rear wheels and axles:

- 24" x 1 3/8 mag (standard) or spoke (optional) wheel with one-part semi-solid tyre as specified by end user.
  Exception, 12" wheelchair with 30cm seat frame length as well as 10" wheelchair, to use 22" x 1 3/8 mag (standard) or spoke (optional) wheel complete with semi-solid one-piece tyre.
- Axle 12mm thick.

Footrest hangers:

- Extra-short (approximately 15cm), short (20cm), long (25cm) or fully detachable 90-degree hangers with angle, height adjustable, reversible footplates as specified by end user.

Footrest:

- Footplate to be hard heavy-duty plastic, or aluminium, or mild steel, and height adjustable.

Leg strap:

- Nylon strap (4cm to 5cm wide) with hook and loop fasteners. The leg strap should have hook and loop fasteners fitted to its full length to allow maximum adjustability.

Frame:

- Basic, non-adjustable folding frame.
- Finish: Epoxy coated.

Guarantee:

- Frame and crossbars guaranteed for a minimum of 2 years from date of issue to end user.

Weight:

- Not to exceed 23kg (complete). With rubber castors, allow +1 kg.

Weight of user:

- Visibly marked on each wheelchair to indicate maximum weight load of end user.

Repair / tool kit:

- 4 rear wheels: bearings
- 4 castors: axle bearings
- 4 castor stem bearings
- 4 seat guides (where applicable)
- Adjustment tool

General requirement:

- Bidder must be able to provide wheelchair with all abovementioned options. The end user will specify the desired option at the time of procuring. The different options available within each technical specification description must be fully interchangeable and available at the same price. Where the end user does not specify options, the wheelchair will be issued as in the option given first for the categories with more than one option.
- No part or component may be changed / deviate from the technical specifications set out in this document.
- Bidder to submit accredited test report to ensure device durability

1.2. C CUSTOMISING OPTIONS FOR INDOOR / LOW ACTIVE BASIC FOLDING FRAME WHEELCHAIRS, LOW SLUNG SEAT

1.2. C.1 One arm drive unit

To be fitted onto the rear axle of the frame and should allow for propulsion of the wheelchair with either left or right hand only. The mounting frame or block should allow for positioning of the rear wheel axle to be in front of the original axle position. The connecting unit between the rear wheels should be a solid bar and have a quick release action to allow removal before folding the wheelchair. The concertina type connecting bar will not be accepted. This option must fit onto items 1.1-1.3.

1.2. C.2 Anti-tip levers (pair)

Removable, length adjustable extensions that fit onto the tipping levers of the side frame to prevent backwards tipping of wheelchair; quick release mechanism; must be able to be mounted with anti-tip castor facing either down or up. This option must fit onto items 1.1-1.3. As specified by end user

1.2. C.3 Amputation extension (pair)

Removable extension brackets that can be fitted onto side frames and tipping levers to allow the rear wheels to be mounted 5 cm (+/- 1 cm) back from original setting. This option must fit onto items 1.1-1.3.

1.2. C.4 45cm and 47.5cm seat extension

45cm and 47.5cm seats, with seat frame extension kit and full-length extended seat upholstery (short strip of upholstery not allowed) to lengthen original seat frames and seat. Upholstery screws to be provided. This option must fit onto items 1.1-1.3. and should be available in the full wheelchair width range.

1.2 C.5 Height adjustable desk armrest

Height adjustable desk armrests, removable/foldaway, complete with mild steel or durable plastic skirt guard to fit basic folding frame manual wheelchair. Length 40 cm, height adjustment range 160-320mm (Range is measured from seat). This option must fit onto items 1.1-1.3. As specified by end user

1.2. C.6 Nylon skirt guard (pair)

Nylon skirt guards (15cm high x 25cm long) to be fitted onto seat and back of wheelchair to protect clothes from dirt on wheels when no armrests are used. This option must fit onto items 1.1-1.3. As specified by end user

1.2. C.7 Bolt on footrest (pair)

Small footplate (15 x 13cm) without hanger, with attachment to be fitted directly onto front post of side frame of wheelchair. This option must fit onto items 1.1-1.3.

1.2. C.8 Elevating footrest hanger (pair)

Angle of footrest hanger to be adjustable between 0 degrees and 70 degrees of knee flexion; Height adjustable calf support; fitted with adult, narrow or juvenile footplates as specified by end user. To be ordered as a pair. This option must fit onto items 1.1-1.3.

1.2. C.9 Elevating footrest hanger (individual)

Angle of footrest hanger to be adjustable between 0 degrees and 70 degrees of knee flexion; Height adjustable calf support; Fitted with adult, narrow or juvenile footplates as specified by end user. To be ordered as an individual item specified Left or Right. This option must fit onto items 1.1-1.3.

1.2 C.10 Footrest with 90 degrees hangers

Footplate of footrests with 90 degrees hangers only in aluminium/mild steel or hard heavy duty plastic, must be height, angle and forward/backward adjustable.

1.2. C.11 Rear wheels

1.2. C.11.a 24 x 1 3/8 spoke wheel (pair)

24 x 1 3/8 rear wheel rim with spokes, mild steel, complete with semi-solid one-piece tyre. This option must fit onto items 1.1-1.3, excluding 12” wheelchairs with 30cm seat frame length and 10” wheelchairs.

1.2. C.11.b 24 x 1¾ spoke wheel (pair)

24 x 1¾ rear wheel rim with spokes, mild steel, complete with semi-solid one-piece tyre. This option must fit onto items 1.1-1.3, excluding 12” wheelchairs with 30cm seat frame length and 10” wheelchairs.

1.2. C.11.c 22 x 1 3/8 spoke wheel (pair)

22 x 1 3/8 rear wheel rim with spokes, mild steel, complete with semi-solid one-piece tyre. This option must fit onto items 1.1-1.3; to fit only 12” wheelchairs with 30cm seat frame length and 10” wheelchairs.

1.2. C.12 Front castors

1.2. C.12.a 20 x 5 cm (8 x 2”) castor with Aluminium hub (pair)

8x2" (20 x 5cm) castors with plastic hub, outer shore hardness of 65-70 and inner, shore hardness of 33-70, with the inner value not exceeding the outer value. This option must fit onto items 1.1-1.3.

1.2. C.12.b 20 x 2.5 cm (8 x 1”) castor with plastic hub (pair)

20 x 2.5cm (8 x 1”) castor with plastic hub and rubber tyre. This option must fit onto items 1.1-1.3.

1.2. C.12.c 20 x 5 cm (8 x 2”) castor with plastic hub (pair)

8x2" (20 x 5cm) castors with plastic hub, outer shore hardness of 65-70 and inner shore hardness of 33-70, with the inner value not exceeding the outer value. This option must fit onto items 1.1-1.3.

1.2. C.13 Quick-release axle for rear wheel

12 mm or 12.7 mm axle with release mechanism to allow for easy removal of the rear wheel. When in place must secure the rear wheel to allow for normal propulsion without limiting wheel rotation.

This option must fit onto items 1.1-1.3.

1.2. C.14 Head support, adjustable, basic occipital support only

Easily removable

Height and depth adjustable

Kidney shaped head support flexible and rake adjustable

Padded and covered in heavy gauge, removable, washable fabric.

This option must be compatible with option 1.1.C.16 and also fit on items 1.1-1.3

1.2. C.15 Head support, complex adjustable (hand shaped)

Easily removable
Height and depth adjustable
4-point, hand shaped head support, flexible and rake adjustable
Moulded and padded Single Vehicle Approval (EVA)
This option must be compatible with option 1.1.C.16 and also fit on items 1.1-1.3

1.2. C.16 Removable universal head rest with horizontal mounting bar

Universal bar that attaches in a horizontal position onto the back post/handles of the wheelchair to be fitted with a removable head rest. Mounting to the wheelchair: quick release mechanism to allow folding of wheelchair. Secure attachment to ensure safety when used as push handle.
Mount for head rest: Adjustable mount to allow 4cm +- 1cm offset left and right from central position. Should be adjustable. This option must fit onto items 1.1-1.3.

1.3 BASIC FOLDING FRAME, SEMI-RECLINER

Size range:

- 51 cm (20") wide
- 46 cm (18") wide
- 43 cm (17”) wide
- 41 cm (16") wide
- 38 cm (15”) wide
- 36 cm (14”) wide
- 30 cm (12”) wide

Backrest / Seat configuration:

- Seat tilt: 5 degrees minimum and 8 degrees maximum (approximate minimum of 3.5cm and maximum of 5.7cm front and rear seat height differential on 40cm seat length).
- Back to seat angle : Maximum 120 degrees.
- 8-10 degrees bend in back post.
- Back height: see table 2 row V
- Seat length:
  - ✓ Standard = 40cm (allow + 1 cm) long on all wheelchairs with 40cm seat frame.
  - ✓ Shorter length may be specified by end user.

Upholstery:

- Back upholstery: Nylon (600 D or stronger) or vinyl: Exception - Reinforced on all 20” or reinforced 18” and 16” wheelchairs. Reinforcement by means of a single nylon strip, at least 4cm wide stitched to outside of back upholstery.
- Seat upholstery: Nylon (600 D or stronger) or vinyl (40 cm long or any shorter length as specified).
- All back and seat upholstery to be reinforced with an inner PVC minimum technical specification of 500 g/m². The inner coated PVC to have a minimum tensile strength of 200 kg/50mm WMD and 160kg/50mm AMD and a minimum tear strength of 25kg both WMD and AMD. (Reinforced wheelchairs as specified will therefore have a second, outer layer of PVC for additional reinforcement. Reinforcement by means of strips not acceptable).

Armrests:

- Removable or fold-away, sport, full or desk with metal or durable plastic skirt guard.
- Armrest sockets to be on side of seat rail only.
- Shape of arm rests may in no way impede the fitting of commercial rigid adjustable back systems onto back posts.

Castors and forks:

- 8x2" (20 x 5cm) castors with plastic hub, outer shore hardness of 65-70 and inner shore hardness of 33-70, with the inner value not exceeding the outer value. Exception: 20” wheelchair: 8x2" (20 x 5cm) castors with aluminium hub, and outer shore hardness of 65-70 and inner shore hardness of 33-70, with the inner value not exceeding the outer value. Alternative, 8x2” (20 x 5cm) rubber castors.
- 8x1” (20 x 2.5cm) castors with plastic hub to be available as an option on request.
- Forks to be minimum 4mm thick mild steel forks. Stem to be fastened to the fork with a thread and nut system to allow for re-fastening.

Rear wheels and axles:

- 24" x 1 3/8 mag (standard) or spoke (optional) wheel with one-part semi-solid tyre as specified by end user.
- Axle 12mm thick.

Footrest hangers:

- Extra-short (15cm), short (20cm), long (25cm) or fully detachable 90-degree hangers with angle, height adjustable, reversible footplates as specified by end user.

Footrest:

- Footplate to be hard heavy-duty plastic, or aluminium, or mild steel, and height adjustable.

Leg strap:

- Nylon strap (4cm to 5cm wide) with hook and loop fasteners. The leg strap should have hook and loop fasteners fitted to its full length to allow maximum adjustability.

Frame:

- Basic, non-adjustable folding frame.
- Finish: Epoxy coated.

Guarantee:

- Frame and crossbars guaranteed for a minimum of 2 years from date of issue to end user.

Weight:

- Not to exceed 23kg (complete). With rubber castors, allow +1 kg.

Weight of user:

- Visibly marked on each wheelchair to indicate maximum weight load of end user.

Repair / tool kit:

- 4 rear wheels: bearings
- 4 castors: axle bearings
- 4 castor stem bearings
- 4 seat guides (where applicable)
- Adjustment tool

General requirement:

- Bidder must be able to provide wheelchair with all abovementioned options. The end user will specify the desired option at the time of procuring. The different options available within each technical specification description must be fully interchangeable and available at the same price. Where the end user does not specify options, the wheelchair will be issued as in the option given first for the categories with more than one option.
- No part or component may be changed / deviate from the specifications set out in this document.
- Bidder to submit accredited test report to ensure device durability

1.3. C CUSTOMISING OPTIONS FOR INDOOR / LOW ACTIVE BASIC FOLDING FRAME CHAIRS, SEMI-RECLINER WHEELCHAIRS

1.3. C.1 Anti-tip levers (pair)

Removable, length adjustable extensions that fit onto the tipping levers of the side frame to prevent backwards tipping of wheelchair; Quick release mechanism; Must be able to be mounted with anti-tip castor facing either down or up. This option must fit onto item 1.3.

1.3. C.2 45cm and 47.5cm seats extension

45cm and 47.5cm seats, with seat frame extension kit and full-length extended seat upholstery (short strip of upholstery not allowed) to lengthen original seat frames and seats. Upholstery screws to be provided. This option must fit onto item 1.3 and should be available in each size.

1.3. C.3 Nylon skirt guard (pair)

Nylon skirt guards (15cm high x 25cm long) that can be fitted onto seat and back of wheelchair to protect clothes from dirt on wheels when no armrests are used. This option must fit onto item 1.3.

1.3. C.4 Bolt on footrest (pair)

Small footplate (15 x 13cm) without hanger, with attachment to be fitted directly onto front post of side frame of wheelchair. This option must fit onto item 1.3.

1.3. C.5 Elevating footrest hanger (pair)

Angle of footrest hanger to be adjustable between 0 degrees and 70 degrees of knee flexion; Height adjustable calf support; Fitted with adult, narrow or juvenile footplates as specified by end user. To be ordered as a pair. This option must fit onto item 1.3.

1.3. C.6 Elevating footrest hanger (individual)

Angle of footrest hanger to be adjustable between 0 degrees and 70 degrees of knee flexion; Height adjustable calf support; Fitted with adult, narrow or juvenile footplates as specified by end user. To be ordered as an individual item. This option must fit onto items 1.1-1.3.

1.3 C.7 Footrest with 90 degrees hangers

Footplate of footrests with 90 degrees hangers only in aluminium/mild steel or hard heavy-duty plastic, must be height/ angle/ forward/ backward adjustable

1.3. C.8 Rear wheels

1.3. C.8.1 24 x 1 3/8 spoke wheel

24 x 1 3/8 rear wheel rim with spokes, mild steel, complete with semi-solid one-piece tyre. This option must fit onto item 1.3.

1.3. C.8.2 24 x 1¾ spoke wheel

24 x 1¾ rear wheel rim with spokes, mild steel, complete with semi-solid one-piece tyre. This option must fit onto item 1.3.

1.3. C.9 Front castors

1.3. C.9.1 20 x 5cm (8 x 2”) castor with aluminium hub

8x2" (20 x 5cm) castors with plastic hub, outer shore hardness of 65-70 and inner shore hardness of 33-70, with the inner value not exceeding the outer value. This option must fit onto item 1.3.

1.3. C.9.2 20 x 2.5cm (8 x 1”) castor with plastic hub

20 x 2.5cm (8 x 1”) castor with plastic hub and rubber tyre. This option must fit onto item 1.3.

1.3. C.9.3 20 x 5cm (8 x 2”) castor with plastic hub

8x2" (20 x 5cm) castors with plastic hub, outer shore hardness of 65-70 and inner shore hardness of 33-70, with the inner value not exceeding the outer value. This option must fit onto item 1.3.

1.3. C.10 Quick-release axle for rear wheel

This option must fit onto item 1.3.

1.3. C.11 Removable universal head rest with horizontal mounting bar

Universal bar that attaches in a horizontal position onto the back post/handles of the wheelchair to be fitted with a removable head rest. Mounting to the wheelchair: Quick release mechanism to allow folding of wheelchair. Secure attachment to ensure safety when used as push handle. Mount for head rest: Adjustable mount to allow 4cm +- 1cm offset left and right from central position. Should be adjustable. This option must fit on item 1.3.

1.4 BARIATRIC FOLDING FRAME WHEELCHAIRS

Size range:

- 51cm (20”)
- 56cm (22”)
- 61cm (24”)

Backrest / Seat configuration:

- Seat tilt: 5 degrees minimum and 8 degrees maximum (approximate minimum of 3.5cm and maximum of 5.7cm front and rear seat height differential on 40cm seat length).
- Back to seat angle not to exceed 90 degrees.
- 8-10 degrees bend in back post.
- Back height: adjustable 40cm-50cm (allow + 1 cm).
- Seat length:
  - ✓ Standard = 45cm (allow + 1 cm) long.
  - ✓ Shorter length may be specified by end user.

Upholstery:

- Back upholstery: Nylon (600 D or stronger) or vinyl: Reinforcement by means of a single nylon strip, at least 4cm wide stitched to outside of back upholstery.
- Seat upholstery: Nylon (600 D or stronger) or vinyl (45cm long or any shorter length as specified). Reinforced wheelchairs as specified will therefore have a second, outer layer of PVC for additional reinforcement. Reinforcement by means of strips not acceptable.
- All back and seat upholstery to be reinforced with an inner PVC minimum technical specification of 500 g/m². The inner coated PVC to have a minimum tensile strength of 200 kg/50mm WMD and 160kg/50mm AMD and a minimum tear strength of 25kg both WMD and AMD.

Armrests:

- Removable or fold away full or desk with aluminium or mild steel skirt guard.
- Arm rest sockets to be on side of seat rail only.
- Shape of arm rests may in no way impede the fitting of commercial rigid adjustable back systems onto back posts.

Castors and forks:

- 8x2" (20 x 5cm) castors with aluminium hub, outer, shore hardness of 65-70 and inner, shore hardness of 33-70, with the inner value not exceeding the outer value. Alternative, 8x2” (20 x 5cm) rubber castors.
- 8x1” (20 x 2.5cm) castors with aluminium hub to be available as an option on request.
- Forks to be minimum 4mm thick mild steel forks. Stem to be fastened to the fork with a thread and nut system to allow for re-fastening.

Rear wheels and axles:

- 24" x 1 3/8 mag (standard) or spoke (optional) wheel with one-part semi-solid tyre as specified by end user.
- Axle 14mm thick.

Footrest hangers:

- Extra-short (approximately 15cm), short (20cm) or long (25cm) fully detachable hangers as specified by end user.

Footrest:

- Footplate to be hard heavy-duty plastic, or aluminium, or mild steel, and height adjustable.

Leg strap:

- Nylon strap (4cm to 5cm wide) with hook and loop fasteners. The leg strap should have hook and loop fasteners fitted to its full length to allow maximum adjustability.

Frame:

- Double cross bar.
- Stabiliser bar to limit flexion / distortion of the frame.
- Finish: Epoxy coated.

Guarantee:

- Frame and crossbars guaranteed for a minimum of 2 years from date of issue to end user.

Weight:

- Not to exceed 25kg (complete). With rubber castors, allow +1 kg.

Weight of user:

- Maximum user weight of 180kgs – 200kgs. To ensure the device fulfils the capacity requirement of Bariatric wheelchair. Indication of maximum weight load visibly marked on each wheelchair

Repair / tool kit:

- 4 rear wheels: bearings
- 4 castors: axle bearings
- 4 castor stem bearings
- 4 seat guides (where applicable)
- Adjustment tool

General requirement:

- Bidder must be able to provide wheelchair with all abovementioned options. The end user will specify the desired option at the time of procuring. The different options available within each technical specification description must be fully interchangeable and available at the same price. Where the end user does not specify options, the wheelchair will be issued as in the option given first for the categories with more than one option.
- No part or component may be changed / deviate from the technical specifications set out in this document.
- Bidder to submit accredited test report to ensure device durability

1.4. C CUSTOMISING OPTIONS FOR BARIATRIC WHEELCHAIRS

1.4. C.1 Anti-tip levers (pair)

Removable, length adjustable extensions that fit onto the tipping levers of the side frame to prevent backwards tipping of wheelchair; Quick release mechanism; Must be able to be mounted with anti-tip castor facing either down or up. As specified by end user.

1.4. C.2 47.5cm seat extension

47.5cm seat, with seat frame extension kit and full-length extended seat upholstery (short strip of upholstery not allowed) to lengthen original seat frames and seat. Upholstery screws to be provided.

1.4. C.3 Height adjustable desk or full arms (pair)

Height adjustable desk arms, removable, complete with mild steel or durable plastic skirt guard to fit basic folding frame manual wheelchair. Height adjustable range 160-320mm measured from seat.

1.4. C.4 Elevating footrest hanger (pair)

Angle of footrest hanger to be adjustable between 0 degrees and 70 degrees of knee flexion; Height adjustable calf support; Fitted with adult, narrow or juvenile footplates as specified by end user. To be ordered as a pair.

1.4. C.5 Elevating footrest hanger (individual)

Angle of footrest hanger to be adjustable between 0 degrees and 70 degrees of knee flexion; Height adjustable calf support; Fitted with adult, narrow or juvenile footplates as specified by end user. To be ordered as an individual item.

1.4. C.6 Rear wheels

1.4. C.6.1 24 x 1 3/8” spoke wheel (pair)

24 x 1 3/8” rear wheel rim with spokes, mild steel, complete with semi-solid one-piece tyre.

1.4. C.6.2 24 x 1¾” spoke wheel (pair)

24 x 1¾ rear wheel rim with spokes, mild steel, complete with semi-solid one-piece tyre.

1.4. C.7 Front castors

1.4. C.7.1 20 x 5cm (8 x 2”) castor with aluminium hub (pair)

8x2" (20cm x 5cm) castors with plastic hub, outer shore hardness of 65-70 and inner shore hardness of 33-70, with the inner value not exceeding the outer value.

1.4. C.7.2 20 x 2.5cm (8 x 1”) castor with aluminium hub (pair)

20cm x 2.5cm (8 x 1”) castor with aluminium hub and rubber tyre.

1.5 URBAN ACTIVE WHEELCHAIRS

1.5.1 ADJUSTABLE FOLDING FRAME URBAN ACTIVE WHEELCHAIRS

Size range:

- 51 cm (20") wide with 43 + 1 cm seat frame length
- 46 cm (18") wide with 43 + 1 cm seat frame length
- 47 cm (17") wide with 43 + 1 cm seat frame length
- 41 cm (16") wide with 43 + 1 cm seat frame length
- 38 cm (15") wide with 43 + 1 cm seat frame length
- 36 cm (14") wide with 43 + 1 cm seat frame length
- 30 cm (12") wide with 43 + 1 cm seat frame length
- 30 cm (12") wide with 33 + 1 cm seat frame length
- 25 cm (10") wide with 33 + 1 cm seat frame length

Backrest / Seat configuration:

- Seat tilt: Adjustable, secondary to centre of gravity adjustment of wheelchair.
- Standard Frame: Back to seat angle 90 degrees. For recline backrest options – see customising options
- Angle of bend in back post to be 8-10 degrees.
- Standard back height: Height adjustable: 40cm-50cm. For additional ranges- see customising options.
- Standard seat depth = 40cm + 1cm long for additional ranges - see customising options.
  For the 12” with 33cm seat rail, the standard = 30 + 1cm long.
  For the 10“ with 33cm seat rail, the standard = 25 + 1cm long.

Centre of gravity adjustability:

- Adjustable by adjusting rear wheel - at least 3 settings for vertical and horizontal.
- The adjustment range of the front castor should ensure that the castor stem always remains perpendicular to the ground within the available tilt in space range.

Upholstery:

- Back upholstery: Tension adjustable back upholstery. 3-piece tension adjustable with major components and quality as specified under tension adjustable backrests in this technical specification.
- Seat upholstery: Nylon (600 D or stronger) (40cm long or any shorter length as specified). All seat upholstery to be reinforced with an inner PVC minimum technical specification of 500 g/m².

Armrests:

- Armrest sockets to be on side of seat rail only.
- Shape of arm rests may in no way impede the fitting of commercial rigid adjustable back systems onto back posts.

Castors and forks:

- 8x1" (20 x 2,5cm) or 8x2" (5 x 20cm) castors as specified by end user.
- 8x2" (20 x 5cm) castors with plastic hub, outer shore hardness of 65-70 and inner shore hardness of 33-70, with the inner value not exceeding the outer value.
- Matching adjustments of the front castor to equal any adjustments done to the rear wheel position.
- Forks to be minimum 0.4cm thick mild steel forks. Stem to be fastened to the fork with a thread and nut system to allow for re-fastening.

Rear wheels and axles:

- 24" x 1 3/8 mag wheel with one-part semi-solid tyre. Exception: 22" x 1 3/8 wheel on 30cm (12") wide with 33cm + 1cm seat frame length and 25cm (10") wide with 33 cm+ 1cm seat frame length.

Rear Wheel adjustments and axles:

- Vertical and horizontal adjustments of rear wheel (at least 3 settings each way).
- Axle 12mm thick.

Footrest hangers:

- Extra-short (approximately 15cm), short (20cm), long (25cm) or fully detachable 90-degree hangers with angle adjustable footplates as specified by end user.

Footrest:

- Footplate to be hard heavy-duty plastic, or aluminium, or mild steel, and height adjustable.

Leg strap:

- Nylon strap (4cm-5cm wide) with hook and loop fasteners. The leg strap should have hook and loop fasteners fitted to its full length to allow maximum adjustability.

Guarantee:

- Frame and crossbars guaranteed for a minimum of 2 years from date of issue to end user.

Frame:

- Adjustable, folding frame
- Aluminium / mild steel
- 30cm (12") wide with 33 + 1cm seat frame length and 25cm (10") wide with 33 + 1cm seat frame length has shorter wheelbase and overall length as the other sizes in this range.

Weight:

- Not to exceed 14kg, excluding rear wheels.

Weight of user:

- Visibly marked on each wheelchair to indicate maximum weight load of end user.

Repair / tool kit:

- 4 rear wheels: bearings
- 4 castors: axle bearings
- 4 castor stem bearings
- 4 seat guides (where applicable)
- Adjustment tool

General requirement:

- Bidder must be able to provide wheelchair with all abovementioned options. The end user will specify the desired option at the time of ordering. The different options available within each technical specification description must be fully interchangeable and available at the same price. Where the end user does not specify options, the wheelchair will be issued as in the option given first for the categories with more than one option.
- No part or component may be changed / deviate from the specifications set out in this document.
- Bidder to submit accredited test report to ensure device durability

1.5.1 C CUSTOMISING OPTIONS FOR ADJUSTABLE FOLDING FRAME URBAN ACTIVE WHEELCHAIRS

1.5.1 C.1 One arm drive unit

A unit that can be fitted onto the rear axle of the frame and allows for propulsion of the wheelchair with either left or right hand only. The mounting frame or block should allow for positioning of the rear wheel axle to be in front of the original axle position. The connecting unit between the rear wheels should be a solid bar and have a quick release action to allow removal before folding the wheelchair. The concertina type connecting bar will not be accepted. This option must fit onto item 1.5.1.

1.5.1 C.2 Anti-tip levers (pair)

Removable, length adjustable extensions that fit onto the tipping levers of the side frame to prevent backwards tipping of wheelchair; Quick release mechanism; Must be able to be mounted with anti-tip castor facing either down or up. This option must fit onto item 1.5.1.

1.5.1 C.3 Option to accommodate extra thigh length using any one the following:

1.5.1 C.3.1 For sizes 12” with standard frame and 14” and larger:
Medium Frame length and seat depth:
40cm +1cm;
43cm +1cm; or
45cm +1 cm

For sizes: 12” with 33cm seat frame: 33cm +1cm seat ext
For sizes: 10” with 33cm seat frame: 30cm +1cm seat ext

1.5.1 C.3.2 Long frame length and seat depth:
43cm +1cm
45cm +1cm or
47cm +1cm

1.5.1 C.3 3 Frame with seat depth adjustability range. Minimum 40cm-50 cm. End user to specify option and seat depth and frame length.

1.5.1 C.4 Back height

Adjustable back height ranges:
30 – 40cm (no bend), 35 – 45 cm (7° bend), 40 – 50 cm (7° bend), 45 – 55 cm (7° bend)

1.5.1 C.5 Nylon skirt guard (pair)

Nylon skirt guards (15cm high x 25cm long) that can be fitted onto seat and back of wheelchair to protect clothes from dirt on wheels when no armrests are used. This option must fit onto item 1.5.1.

1.5.1 C.6 Bolt on footrest (pair)

Small footplate (15 x 13cm) without hanger, with attachment to be fitted directly onto front post of side frame of wheelchair. This option must fit onto item 1.5.1.

1.5.1 C.7 Elevating footrest hanger (pair)

Angle of footrest hanger to be adjustable between 0 degrees and 70 degrees of knee flexion; Height adjustable calf support; Fitted with adult, narrow or juvenile footplates as specified by end user. To be ordered as a pair. This option must fit onto item 1.5.1.

1.1. C.8 Elevating footrest hanger (individual)

Angle of footrest hanger to be adjustable between 0 degrees and 70 degrees of knee flexion; Height adjustable calf support; Fitted with adult, narrow or juvenile footplates as specified by end user. To be ordered as an individual item.

1.5.1 C.9 Footrest with 90 degrees hangers

Footplate of footrests with 90 degrees hangers only in aluminium/mild steel or hard heavy-duty plastic, must be height/ angle/ forward/ backward adjustable.

1.5.1 C10. Rear wheels

1.5.1 C.10.1 Spoke wheel: 24 x 1 3/8” (pair)

24 x 1 3/8” rear wheel rim with spokes, mild steel, complete with semi-solid one-piece tyre. This option must fit onto item 1.5.1.

1.5.1 C.10.2 Spoke wheel: 24 x 1¾” (pair)

24 x 1¾ rear wheel rim with spokes, mild steel, complete with semi-solid one-piece tyre. This option must fit onto item 1.5.1.

1.5.1 C.11 Front castors

1.5.1 C.11.1 Castor with aluminium hub: 20 x 5cm (8 x 2”) (pair)

8x2" (20 x 5cm) castors with plastic hub, outer, shore hardness of 65-70 and inner, shore hardness of 33-70, with the inner value not exceeding the outer value. This option must fit onto item 1.5.1.

1.5.1 C.11.2 Castor with plastic hub: 20 x 2.5cm (8 x 1”) (pair)

20 x 2.5cm (8 x 1”) castor with plastic hub and rubber tyre. This option must fit onto item 1.5.1.

1.5.1 C.11.3 Castor with plastic hub: 20 x 5cm (8 x 2”) (pair)

8x2" (20 x 5cm) castors with plastic hub, outer, shore hardness of 65-70 and inner, shore hardness of 33-70, with the inner value not exceeding the outer value. This option must fit onto item 1.5.1.

1.5.1 C.12 Head support, adjustable, basic occipital support only

Easily removable
Height and depth adjustable
Kidney shaped head support flexible and rake adjustable
Padded and covered in heavy gauge, removable, washable fabric.
This option must be compatible with option 1.5.1.C.14 and also fit on item 1.5.1

1.5.1. C.13 Head support, complex adjustable (hand shaped)

Easily removable
Height and depth adjustable
4-point, hand shaped head support, flexible and rake adjustable
Moulded and padded Single Vehicle Approval (EVA)
This option must be compatible with option 1.5.1.C.14 and also fit on item 1.5.1

1.5.1 C.14 Removable universal head rest with horizontal mounting bar

Universal bar that attaches in a horizontal position onto the back post/handles of the wheelchair to be fitted with a removable head rest. Mounting to the wheelchair: Quick release mechanism to allow folding of wheelchair. Secure attachment to ensure safety when used as push handle. Mount for head rest: Adjustable mount to allow 4cm +- 1cm offset left and right from central position. Should be adjustable. This option must fit on item 1.5.1.

1.5.1 C.15 Adjustable folding frame with a tool adjustable recline back post

Adjustable back to seat angle 90-105 degrees. Adjustment mechanism tool adjustable with minimum 3 adjustment increments.

1.5.1 C.16 Adjustable backrest height ranges:

35 – 45 cm (straight back posts), 40 – 50 cm (straight back posts), 45 – 55 cm (straight back posts)

1.5.2 ADJUSTABLE FOLDING FRAME URBAN ACTIVE WHEELCHAIR - LIGHT WEIGHT

Size range:

- 51 cm (20”) wide with 43 + 1 cm seat frame length
- 46 cm (18") wide with 43 + 1 cm seat frame length
- 41 cm (16") wide with 43 + 1 cm seat frame length
- 36 cm (14") wide with 43 + 1 cm seat frame length
- 30 cm (12”) wide with 43 + 1 cm seat frame length
- 30 cm (12”) wide with 33 + 1 cm seat frame length
- 25 cm (10”) wide with 33 + 1 cm seat frame length

Backrest / Seat configuration:

- Seat tilt: Adjustable, secondary to centre of gravity adjustment of wheelchair.
- Standard frame: Back to seat angle: 90 degrees. For recline backrest options – see below customising options
- Standard back height: Height adjustable 40cm-50cm. For additional ranges see customising options.
- Standard seat depth = 40cm + 1cm long for additional ranges see customising options.
  For the 12” with 33cm seat rail, the standard = 30 + 1cm long.
  For the 10“ with 33cm seat rail, the standard = 25 + 1cm long.

Centre of gravity adjustability:

- Adjustable by adjusting rear wheel - at least 3 settings for vertical and horizontal.
- The adjustment range of the front castor should ensure that the castor stem always remains perpendicular to the ground within the available tilt in space range.

Upholstery:

- Back upholstery: Tension adjustable back upholstery. 3-piece tension adjustable with major components and quality as specified under tension adjustable backrests in this technical specification.
- Seat upholstery: Nylon (600 D or stronger) (40cm long or any shorter length as specified). All seat upholstery to be reinforced with an inner PVC minimum technical specification of 500 g/m².

Height adjustable Armrests:

- Flip back and removable, full or desk, with durable plastic skirt guard.
- Shape of arm rests may in no way impede the fitting of commercial rigid adjustable back systems onto back posts.

Castors and forks:

- Castors: 6 x 1" (15 x 2.5cm).
- Stem to be fastened to the fork with a thread and nut system to allow for re-fastening.
- Matching adjustments of the front castor to equal any adjustments done to the rear wheel position.
- Forks to be minimum 4mm thick mild steel or aluminium. Stem to be fastened to the fork with a thread and nut system to allow for re-fastening.

Rear wheels and axles:

- 24" x 1 3/8 mag wheel with one-part semi-solid tyre. Exception: 22" x 1 3/8 wheel on 30cm (12") wide with 33 + 1cm seat frame length and 25cm (10") wide with 33 + 1cm seat frame length.

Rear wheel adjustment and axles:

- Vertical and horizontal adjustments of rear wheel (at least 3 settings each way).
- Axle 12mm thick.

Footrest hangers:

- Fixed or swing away. As specified by end user

Footrest:

- Footplate to be hard heavy-duty plastic, or aluminium, or mild steel, and height adjustable and flip up

Leg strap:

- Nylon strap (4-5cm wide) with hook and loop fasteners. The leg strap should have hook and loop fasteners fitted to its full length to allow maximum adjustability

Guarantee:

- Frame and crossbars guaranteed for a minimum of 2 years from date of issue to end user.

Frame:

- Adjustable, folding frame
- Aluminium / mild steel
- 30cm (12") wide with 33 + 1cm seat frame length and 25cm (10") wide with 33 + 1cm seat frame length has shorter wheelbase and overall length as the other sizes in this range.

Weight:

- Not to exceed 12kg, excluding rear wheels.

Weight of user:

- Visibly marked on each wheelchair to indicate maximum weight load of end user.

Repair / tool kit:

- 4 rear wheels: bearings
- 4 castors: axle bearings
- 4 castor stem bearings
- 4 seat guides (where applicable)
- Adjustment tool

General requirement:

- Bidder must be able to provide wheelchair with all abovementioned options. The end user will specify the desired option at the time of ordering. The different options available within each technical specification description must be fully interchangeable and available at the same price. Where the end user does not specify options, the wheelchair will be issued as in the option given first for the categories with more than one option.
- No part or component may be changed / deviate from the specifications set out in this document.
- Bidder to submit accredited test report to ensure device durability

1.5.2. C CUSTOMISING OPTIONS FOR ADJUSTABLE FOLDING FRAME URBAN ACTIVE CHAIRS – LIGHT WEIGHT

1.5.2. C.1 Anti-tip levers (pair)

Removable, length adjustable extensions that fit onto the tipping levers of the side frame to prevent backwards tipping of wheelchair; Quick release mechanism; Must be able to be mounted with anti-tip castor facing either down or up. This option must fit onto item 1.5.2.

1.5.2.C.2. Option to accommodate extra thigh length using any one the following:

1.5.2.C.2.1 For sizes 12” with standard frame and 14” and larger:
Medium Frame length and seat depth:
40cm +1cm;
43cm +1cm ;
45cm +1 cm
For sizes: 12” with 33cm seat frame: 33cm +1cm seat ext
For sizes: 10” with 33cm seat frame: 30cm +1cm seat ext

1.5.1 C.2.2 Long frame length and seat depth:
43cm +1
45cm +1cm or
47cm +1cm

1.5.2.C.2 3 Frame with seat depth adjustability range. Minimum 40cm-50cm. End user to specify option and seat depth and frame length.

1.5.2.C.3 Back height

Adjustable back heigh ranges:
30 – 40cm (no bend), 35 – 45 cm (7° bend), 40 – 50 cm (7° bend), 45 – 55 cm (7° bend)

1.5.2.C.4 Adjustable folding frame with an adjustable recline back post

Adjustable back to seat angle 90º-105º degrees. Adjustment mechanism tool adjustable with minimum 3 adjustment increments of 5º (0º, -5º, -10º, -15º)

1.5.2. C.5 Rear wheels

1.5.2. C.5.1 Spoke wheel: 24 x 1 3/8" (pair)

24 x 1 3/8" rear wheel rim with spokes, mild steel, complete with semi-solid one-piece tyre. This option must fit onto item 1.5.2.

1.5.2. C.5.2 Spoke wheel: 24 x 1¾" (pair)

24 x 1¾ rear wheel rim with spokes, mild steel, complete with semi-solid one-piece tyre. This option must fit onto item 1.5.2.

1.5.2. C.6 Front castors

1.5.2. C.6.1 Castors: 4 x1" (10cm x 2.5cm)

This option must fit onto item 1.5.2.

1.5.2. C.6.2 Castors: 5"x1" (12cm x 2.4cm)

This option must fit onto item 1.5.2.

1.5.2. C.67 Adjustable back height ranges:

35 – 45 cm (straight back posts), 40 – 50 cm (straight back posts), 45 – 55 cm (straight back posts)

1.5.3 ADJUSTABLE RIGID FRAME WHEELCHAIRS, 4-WHEELER URBAN ACTIVE WHEELCHAIR WITH STANDARD OR LONG FRAME)

A Wheelbase (Allow ± 1cm)

B Overall length (maximum, with footrest set fully extended, allowing 5cm clearance from the ground).

C Back upholstery height (measured from top of seat rail to top of back rest upholstery).

D Seat width measured from outside of one seat rail to outside of opposite seat rail.

E Seat length measured from front of back post to front of seat upholstery.

Table 5: Adjustable rigid frame 4-wheeler urban active wheelchair

(Allow + 1cm)

		30cm with 30cm seat rail	All other sizes
A	Wheelbase (with rear wheel in neutral position)	Standard frame is 33 ± 1cm Long frame is 38 ± 1cm	Standard frame wheelbase is 38 ± 1cm Long frame is 43 ± 1cm
C	Back upholstery height (measured from top of seat rail to top of back rest upholstery)	Low: 28-38 ± 1cm Std back = 33-43 ± 1cm	Low: 28-38 ± 1cm Std back = 33-43 ± 1cm
E	Seat length measured from front of back post to front of seat upholstery	Std frame: 30 + 1cm Long frame: 40 + 1cm	Std frame: 40 + 1cm Long frame: 43 + 1cm 45 + 1cm

Size range:

1.5.3.1 ADJUSTABLE RIGID FRAME, STANDARD FRAME LENGTH

- 46 cm (18") wide
- 43 cm (17") wide
- 41 cm (16") wide
- 38 cm (15") wide
- 35 cm (14") wide
- 30 cm (12") wide with 40 cm seat frame length
- 30 cm (12") wide with 30 cm seat frame length
- 25 cm (10”) wide with 30 cm seat frame length but 25 cm seat

1.5.3.2 ADJUSTABLE RIGID FRAME, LONG FRAME LENGTH

- 46 cm (18") wide
- 43 cm (17") wide
- 41 cm (16") wide
- 38cm (15") wide
- 35 cm (14") wide
- 30 cm (12") wide with 40 cm seat frame length

Backrest / Seat configuration:

- Back to seat angle adjustable and not to exceed 85-100 degrees range, adjustment tool adjustable with additional quick release adjustment, nonfraying.
- Seat angle adjustable, must be able to adjust to level (horizontal) position.
- No bend in back post.
- Back height: Low back = 28-38 + 1cm, standard back = 33-43 + 1cm.
- Push handles attached to back posts.
- Extended push handle on 10” and 12” wheelchair.
- Seat depth:
  - ✓ + 1cm long on all wheelchairs with standard frame.
  - ✓ 43 + 1cm on all wheelchairs with long frame.
  - ✓ Exception: 30 + 1cm long on 30cm (12") wide with 30cm seat frame length and 25 + 1cm on.
  - ✓ 25cm (10”) wide with 30cm seat frame length.
  - ✓ Shorter length may be specified by end user.

Centre of gravity adjustability:

- Seat tilt : 5degrees – 10degrees
- Adjustability of Centre of Gravity by changing both seat angle and either seat-back system horizontal and vertical position or changing wheel position both vertically and horizontally.
- Minimum of 5 horizontal settings, 1 negative, 1 neutral and 3 forward. (Seat or rear wheel). If infinitely adjustable, should have minimum adjustment range of 3cm.

Upholstery:

- Back upholstery: Tension adjustable back upholstery. 3-piece tension adjustable with major components and quality as specified under tension adjustable backrests in this technical specification.
- Seat upholstery: 40 + 1cm long on all wheelchairs with standard frame. 43 + 1cm on all wheelchairs with long frame. Shorter length may be specified by end user. Exception: 30 + 1cm long on 30cm (12") wide with 30cm seat frame length or any shorter length as specified. Fabric to be Nylon (600 D or stronger). All seat upholstery to be reinforced with an inner PVC minimum technical specification of 500 g/m².

Skirt guards:

- Skirt guard to cover wheel rim arch protruding above seat.
- No arm rests.

Castors and forks:

- Castors: 6 x 1" (15 x 2.5cm).
- Stem to be fastened to the fork with a thread and nut system to allow for re-fastening.

Rear wheels and axles:

- 24" x 1 3/8 mag wheel with one-part semi-solid tyre. Exception, 12” wheelchair with 30cm seat rail length and 25cm (10") wide wheelchair to use 22” x 1 3/8 mag (standard) or spoke (optional) wheel complete with semi-solid one-piece tyre.

Quick release axles:

- 12 mm or 12.7 mm axle.

Footrest hangers:

- Integral part of frame.

Footrest:

- Fixed angle adjustable, height adjustable without modification with broad weight-bearing surface. On 12” and 10” wheelchairs, the footplate to be on 15cm elevations.

Leg strap:

- Nylon strap (4-5cm wide) with hook and loop fasteners. The leg strap should have hook and loop fasteners fitted to its full length to allow maximum adjustability.

Frame:

- Adjustable rigid frame.
- Mild steel or aluminium.
- Long frame is 5cm longer than standard frame on all sizes except 30cm with 30cm seat rail, where difference is between 4 and 5cm. The wheelbase is measured with castor fork pointing back to rear wheel from centre of castor to centre of rear wheel along the horizontal plane (as per diagram for basic folding frame wheelchair).
- Standard frame wheelbase is 38 + 1cm. Long frame is 43 + 1cm. For the 30cm wheelchair with 30cm seat rail, the standard frame is 33 + 1cm.
- 30cm (12") wide with 33 + 1cm seat frame length and 25cm (10") wide with 33 + 1cm seat frame length has shorter wheelbase and overall length as the other sizes in this range.

Guarantee:

- Frame and crossbars guaranteed for a minimum of 2 years from date of issue to end user.

Weight:

- Not to exceed 15kg excluding rear wheels.

Weight of user:

- Visibly marked on each wheelchair to indicate maximum weight load of end user.

Repair / tool kit:

- 4 rear wheels: bearings
- 4 castors: axle bearings
- 4 castor stem bearings
- 4 seat guides (where applicable)
- Adjustment tool
- Tension adjustable filler straps to allow for adjustment of back height.

General requirement:

- Bidder must be able to provide wheelchair with all abovementioned options. The end user will specify the desired option at the time of ordering. The different options available within each technical specification description must be fully interchangeable and available at the same price. Where the end user does not specify options the wheelchair will be issued as in the option given first for the categories with more than one option.
- No part or component may be changed / deviate from the specifications set out in this document.
- Bidder to submit accredited test report to ensure device durability

1.5.3. C CUSTOMISING OPTIONS FOR ADJUSTABLE RIGID FRAME 4-WHEELER URBAN ACTIVE WHEELCHAIRS WITH STANDARD OR LONG FRAME

1.5.3.C.1. Option to accommodate extra thigh length using any one the following:

1.5.3.C.1.1 Seat depth (extension): Standard frame
38cm +1cm
41cm +1cm
43cm +1cm;

1.5.3.C.1.2 Long wheelchair frame:
45cm +1cm;
47cm+1cm
49 cm +1.

1.5.3.C.1 3 Frame with seat depth adjustability range. Minimum 40cm-50cm. End user to specify option and seat depth and frame length.

1.5.3.C.2 Short footplate hanger inserts

Special insert to increase the range of the standard footplate height in all wheelchairs in 1.5.3.

1.5.3.C.3 Extended push handles

Extended T-handle style push handles with mounting mechanism to mount onto rear axle. Quick-lease mechanism to remove handles from wheelchair and mounting mechanism.

1.5.3. C.4 Quick-release clip-on castor wheel unit

A large castor wheel unit that can be fitted onto the frame of the wheelchair to turn the wheelchair into a 3-wheeler and allows for the front castors to clear the ground. Should have a quick-lease mechanism to attach and remove device from wheelchair. Secure attachment to ensure safety when used. When detached, the unit should fit securely into an assembly onto the back of the wheelchair.

1.5.3 C 5 Backrest height:

Adjustable between 36cm – 46 +1cm

1.6 HYBRID ACTIVE WHEELCHAIRS

A Wheelbase (Allow ± 1cm).
B Overall length (Maximum, with footrest set fully extended, allowing 5cm clearance from the ground).
C Back upholstery height (measured from top of seat rail to top of back rest upholstery).
D Seat width measured from outside of one seat rail to outside of opposite seat rail.
E Seat length measured from front of back post to front of seat upholstery.

Table 6: Hybrid Active Wheelchairs

(Allow + 1 cm)

		30cm with 30cm seat rail	All other sizes
A	Wheelbase	Short wheelbase (Active position): 59cm ± 1cm Long wheelbase (Least active / safe): 67cm ± 1cm	Short wheelbase (active position): 68cm ± 1cm Long wheelbase (least active / safe): 76cm ± 1cm
C	Back upholstery height (measured from top of seat rail to top of back rest upholstery)	Low: 28cm-38 ± 1cm Std back = 33cm-43 ± 1cm	Low: 28cm-38 ± 1cm Std back = 33cm-43 ± 1cm
E	Seat length measured from front of back post to front of seat upholstery	30cm + 1cm	40cm + 1cm

1.6.1. ADJUSTABLE, 3-WHEELER HYBRID

Size range:

- 46 cm (18") wide
- 43 cm (17") wide
- 41 cm (16") wide
- 38 cm (15") wide
- 35 cm (14") wide
- 34 cm (13”) wide
- 30 cm (12") wide with 40 cm seat frame length
- 30 cm (12") wide with 30cm seat frame length
- 25 cm (10”) wide with 25 cm seat frame length

Backrest / Seat configuration:

- Seat tilt: Adjustable.
- Back to seat angle not to exceed 70-98 degrees.
- No bend in back post.
- Back height: Low back = 28-38 + 1cm, standard back = 33-43 + 1cm.
- Push handles attached to back posts.
- Seat length:
  - ✓ Standard = 40cm + 1cm long on all wheelchairs with 40cm seat frame.
  - ✓ Exception: 30cm + 1cm long on 30cm (12") wide with 30cm seat frame length and 25cm + 1cm long on 25cm (10”) wide with 25cm seat frame length.
  - ✓ Shorter length may be specified by end user.

Centre of gravity adjustability:

- Adjustability of Centre of Gravity by positioning rear wheel and tilting seat angle.

Upholstery:

- Back upholstery: Tension adjustable back upholstery. 3-piece tension adjustable with major components and quality as specified under tension adjustable backrests in this technical specification.
- Seat length: Standard = 40cm + 1cm long on all wheelchairs with 40cm seat frame. Shorter length may be specified by end user. Exception: 30 + 1cm long on 30cm (12") wide with 30cm seat frame length and 25cm on 25cm (10”) wide or any shorter length as specified. Fabric to be Nylon (600 D or stronger). All seat upholstery to be reinforced with an inner PVC minimum technical specification of 500 g/m².

Skirt guards:

- Skirt guard to cover wheel rim arch protruding above seat.
- No arm rests.

Front Castors and forks:

- 8x2" (20 x 5cm) castors with plastic hub, outer shore hardness of 65-70 and inner shore hardness of 33-70, with the inner value not exceeding the outer value. Alternative 8x2” (20 x 5cm) rubber castors.
- Forks to be minimum 4mm thick mild steel forks. Stem to be fastened to the fork with a thread and nut system to allow for re-fastening.

Rear wheels and axles:

- 24" x 1 3/8 mag wheel with one-part semi-solid tyre. Exception, 12” wheelchair with 30cm seat rail length and 25cm+ 1cm long on 25cm (10”) wide with 25cm seat frame length to use 22” x 1 3/8 mag (standard) or spoke (optional) wheel complete with semi-solid one-piece tyre.

Quick release axles:

- 2 degrees camber.
- At least 3 vertical and 4 horizontal adjustments on rear wheel axle position.
- Axle 12 mm thick.

Footrest hangers:

- Integral part of frame.

Footrest:

- Fixed or flip-up, angle adjusted and height adjustable without modification.

Heel strap:

- Nylon heel strap (4cm-5cm wide).

Guarantee:

- Frame and crossbars guaranteed for a minimum of 2 years from date of issue to end user.

Weight:

- Not to exceed 16kg (complete). With rubber castor, allow +0.5kg.
- 12” not to exceed 14kg.

Weight of user:

- Visibly marked on each wheelchair to indicate maximum weight load of end user.

Repair / tool kit:

- 4 rear wheels: bearings
- 4 castors: axle bearings
- 4 castor stem bearings
- 4 seat guides (where applicable)
- Adjustment tool
- Tension adjustable filler straps to allow for adjustment of back height.

General requirement:

- Bidder must be able to provide wheelchair with all abovementioned options. The end user will specify the desired option at the time of procuring. The different options available within each technical specification description must be fully interchangeable and available at the same price. Where the end user does not specify options the wheelchair will be issued as in the option given first for the categories with more than one option.
- No part or component may be changed / deviate from the technical specifications set out in this document.
- Bidder to submit accredited test report to ensure device durability

Frame:

- Adjustable three-wheeler.
- Rigid; mild steel or aluminium.
- The wheelbase is measured with castor fork pointing back to rear wheel from centre of castor to centre of rear wheel along the horizontal plane (as per diagram for basic folding frame wheelchair). Short wheelbase (active position) is 68cm + 1cm. Long wheelbase (least active / safe) is 76cm + 1cm. For the 30cm wheelchair with 30cm seat rail, the range is 59cm + 1cm to 67 + 1cm.
- Bearing spacer to be used in all bearing applications, i.e. rear wheel, front castor, and castor stem.

1.6.1. C CUSTOMISING OPTIONS FOR ADJUSTABLE 3-WHEELER HYBRID ACTIVE WHEELCHAIRS

1.6.1. C.1 43cm and 45cm extended seat length

43cm and 45cm extended seats upholstery, with seat frames and screws complete. The extended seat is a complete unit, and a short strip extension of upholstery is not allowed. This option must fit onto item 1.6.1 and should be available in each size.

1.6.1. C.2 Extended push handles

Extended T-handle style push handles with mounting mechanism to mount onto rear axle. Quick-lease mechanism to remove handles from wheelchair and mounting mechanism.

1.6.1 C 3 Backrest height:

Adjustable between 36cm – 46 +1cm

1.6.1 C 4 Seat depth:

Option to accommodate extra thigh length using any one the following:

Seat depth (extension): Standard frame
38cm +1cm
41cm +1cm
43cm +1cm;

Long wheelchair frame:
45cm +1cm;
47cm+1cm
49 cm +1cm

1.6.2 ADJUSTABLE FOLDING FRAME, HYBRID WITH LONG WHEELBASE

Size range:

- 51 cm (20”)
- 46 cm (18”)
- 41 cm (16”)
- 36 cm (14”)

Backrest / Seat configuration:

- Seat tilt: 8 degrees (approximately 8cm front and rear seat height differential on 40cm seat length).
- Back to seat angle not to exceed 90 degrees.
- No bend in back post.
- Back height: 35cm-45cm range adjustable.
- Seat length:
  - ✓ Standard = 40cm + 1cm long on all wheelchairs with 40cm seat frame.
  - ✓ Shorter length may be specified by end user.

Centre of gravity adjustability:

- Adjustable by adjusting rear wheel position horizontally at least three (3) positions.

Upholstery:

- Back upholstery: Tension adjustable back upholstery. 3-piece tension adjustable with major components and quality as specified under tension adjustable backrests in this technical specification.
- Seat upholstery: Nylon (600 D or stronger) (40cm long or any shorter length as specified). All seat upholstery to be reinforced with an inner PVC minimum technical specification of 500 g/m².

Skirt guards:

- Optional or integrated (bidder to specify)

Castors and forks:

- 10cm x 6.5cm complete rubber unit.
- Fitted with 37 x 12mm bearings.
- Stem to be fastened to the fork with a thread and nut system to allow for re-fastening.

Rear wheels and axles:

- 24 x 1 ¾ “mag or spoke wheel with one-part semi-solid tyre or pneumatic.
- Minimum of 6 rear wheel positions – safe, neutral, and active.
- Axle 0.12cm thick.

Footrest hangers:

- Footrest hanger fitted to frame / removable with tools.

Footrest:

- Flip-up footplate to be hard heavy-duty plastic, or aluminium, or mild steel, and height adjustable.

Leg strap:

- Nylon strap (4cm wide) with hook and loop fasteners. The leg strap should have hook and loop fasteners fitted to its full length to allow maximum adjustability.

Guarantee:

- Frame and crossbars guaranteed for a minimum of 2 years from date of issue to end user.

Frame:

- Folding frame
- Mild steel

Weight:

- Not to exceed 23kg (complete)

Weight of user:

- Visibly marked on each wheelchair to indicate maximum weight load of end user.

Repair / tool kit:

- 4 rear wheels: bearings
- 4 castors: axle bearings
- 4 castor stem bearings
- 4 seat guides (where applicable)
- Adjustment tool
- Tension adjustable filler straps to allow for adjustment of back height.

General requirement:

- Bidder must be able to provide wheelchair with all abovementioned options. The end user will specify the desired option at the time of procuring. The different options available within each specification description must be fully interchangeable and available at the same price. Where the end user does not specify options, the wheelchair will be issued as in the option given first for the categories with more than one option.
- No part or component may be changed / deviate from the technical specifications set out in this document.
- Bidder to submit accredited test report to ensure device durability

1.6.2. C CUSTOMISING OPTIONS FOR ADJUSTABLE FOLDING FRAME HYBRID ACTIVE WHEELCHAIRS WITH LONG WHEELBASE

1.6.2. C.1 43cm and 45cm extended seat length

43cm and 45cm extended seat upholstery, with seat frames and screws complete. The extended seat is a complete unit, and a short strip extension of upholstery is not allowed. This option must fit onto item 1.6.2 and should be available in each size.

1.7 RURAL ACTIVE CHAIRS – ADJUSTABLE 3-WHEELER

Size range:

- 48 cm (18.9") wide
- 44 cm (17.3") wide
- 40 cm (15.7") wide
- 36 cm (14.2") wide

Backrest / Seat configuration:

- Back rest angle adjustable: settings 86, 90 and 94 degrees (Backrest angle relative to seat angle of 10 degrees from ground).
- No bend in back post.
- Back height: Height adjustable backrest: to measure from solid seat Low back 38cm, Tall back 47cm.
- Push handles attached to back posts.
- Seat tilt: 10 degrees.
- Seat length: To be specified by end user.
  48cm (18.9") wide x 40, 44, 48 or 50cm long
  44cm (17.3") wide x 40, 44, 48 or 50cm long
  40cm (15.7") wide x 36, 40, 44, 48 or 50cm long
  36cm (14.2") wide x 36, 40, 44, 48 or 50cm long

Centre of gravity adjustability:

- Adjustability of Centre of Gravity by positioning rear wheel in 2 positions within a 6,5cm range, i.e. safe / active.

Cushion:

- Pressure relief cushion contoured polyurethane foam with pre-ischial shelf. Cover fabric, waterproof, terry cloth cotton covered, 2-way stretch, breathable, anti-microbial shield treatment, and machine washable and can be dried in tumble drier and water resistant/ fire retardant nylon upholstery.

Upholstery:

- Back rest: Solid aluminium shell with shallow lateral walls, padded with open-cell, medium density foam of density 40 kg/m³, angular/height adjustment and adjustable sacral pad.
- Backrest cover removable either a combination of heavy-duty lycra (220g/m² and yield 3.4m/kg) and 600D nylon or 200D nylon.
- Seat: solid plywood or polyethylene (6/8/10mm thick appropriate to size) 36cm-48cm cut and setup to end-user technical specifications.

Arm rests:

- Removable arm rests.

Castors and forks:

- One rubber castor, size of 22 x 6cm.

Rear wheels and axles:

- 26 x 1 3/8" spoke wheel with one-part semi-solid tyre.
- Quick release axles.
- 2 degrees of camber.

Footrest hangers:

- Integral part of frame.

Footrest:

- Fixed or flip-up, angle adjusted and height adjustable range of 14cm without modification.
- Leg position and foot angle adjustment.

Leg strap:

- Heel, calf, and toe straps.

Frame:

- Rigid 3-wheeler. Minimum overall length with rear wheel in active position 120cm + 2cm.
- Backrest - fold down.
- The wheelbase is measured with castor fork pointing back to rear wheel from centre of castor to centre of rear wheel along the horizontal plane (as per diagram for basic folding frame wheelchair). Short wheelbase (active position) is 75cm+ 2cm. Long wheelbase (least active / safe) is 81cm+ 2cm.
- Frame material – aluminium to be grade 6061 T4 with minimum tensile strength of 150 MPa and minimum yield of 115 MPa. Mild steel with minimum yield of 215 MPa and tensile strength of 340 MPa.

Guarantee:

- Frame and crossbars guaranteed for a minimum of 2 years from date of issue to end user.

Weight:

- Not to exceed 25kg, complete.

Weight of user:

- Visibly marked on each wheelchair to indicate maximum weight load of end user.

Repair / tool kit:

- 4 rear wheels: bearings
- 4 castors: axle bearings
- 4 castor stem bearings
- 4 seat guides (where applicable)
- Adjustment tool

General requirement:

- In the technical specifications where more than 1 option is provided: Bidder must be able to provide wheelchair with all of options as specified. The end user will specify the desired option at the time of ordering. The different options stated within each technical specification description must be fully interchangeable and available at the same price. Where the end user does not specify options, the wheelchair will be issued as in the option listed first.
- No part or component may be changed / deviate from the technical specifications set out in this document.
- Bidder to submit accredited test report to ensure device durability

1.8 ADJUSTABLE POSTURE SUPPORT WHEELCHAIRS

1.8.1 ADJUSTABLE POSTURE SUPPORT CHAIRS, SELF-PROPELLING, WITH MODULAR DETACHABLE SEATING SYSTEM (BUGGY TYPE)

Size range:

- 12” short Seat 30 cm wide x 25 cm - 32 cm adjustable depth
- 12” standard Seat 30 cm wide x 30 cm - 40 cm adjustable depth
- 14” short Seat 35 cm wide x 25 cm - 35 cm adjustable depth
- 14” standard Seat 35 cm wide x 35 cm - 45 cm adjustable depth
- 16” standard Seat 40 cm wide x 35 cm - 45 cm adjustable depth
- 18” standard Seat 45 cm wide x 35 cm - 45 cm adjustable depth

Size Range:

The sizes below are maximum internal usable measurements of seat system and exclude postural seating supports but include the seat cushion.

- Seat width 17 cm – 23 cm, depth 18 cm – 28 cm, height 28 cm – 39 cm
- Seat width 17 cm – 2,7 cm, depth 23 cm – 34 cm, height 35 cm – 45 cm
- Seat width 22 cm – 28 cm, depth 29 cm – 38 cm, height 36 cm – 46 cm

Seat System:

- Removable modular adjustable seating system
- Seating system to be removable/attachable without tools
- Aluminium, wood, or plastic
- Trunk support: Minimum length 100mm for smallest size / 180mm for largest size. Trunk support independently adjustable vertically and horizontally. Padded with a minimum of 6mm nonporous/ sealed cell foam.
- Lined/padded with minimum of 6mm nonporous/ sealed cell foam
- Removable washable waterproof covers.
- Adjustable tilt in space up to 60 degrees
- Recline - Seat to back angle adjustable in range 90 to 110 degrees.
- Pelvic strap length adjustable, padded and at a 60–90-degree angle at the hips
- Width of pelvic straps for 12” and smaller – 3 cm
- Width of straps for 14” and bigger – 5 cm
- Seating systems allows for adaptation, build-up and customising
- Set of modular positioning support wedges / inserts
- Seat cushion with / without abduction block as specified by end user: Top layer high density foam 2.5 - 5 cm thick; 36/20with hardness factor 18 – 21.6; Density 32.1-40 kg/m3). Base layer 2.5 cm high density compressed (reconstituted flexible PU) foam 1300; Hardness factor 52-63; Density 130 +10% kg/m3).
- (SANS 642 – 1976). Waterproof 2-way stretch, breathable cover with anti-microbial shield (AEGIF) treatment
- Seat length adjustable as specified
- Back height adjustable as specified

- Back support to accommodate thoracic spine or designed in such a way to accommodate user without causing any restriction / interference with self-propelling / posture.

Seat and frame configuration:

- The chair will be modular. The seat system (combined seat and backrest with optional accessories such as headrest) will be separate from the base frame
- The base frame to be rigid or folding
- Infinite adjustable seat system tilt between 0 and minimum 30 degrees
- Push handles minimum 93.5 cm from ground with 10 cm height adjustability. For smaller sizes – adult should comfortably reach push handle. Push handle may in no way restrict self-propelling / affect posture / set-up of back support system.
- The design should allow for COG adjustment either as a specific wheel/seat adjustment or by means of a mechanism which will always result in COG being safely within base of support.

Front castors and forks:

- Seat width over 30 cm: Front castor wheel diameter range: 10 cm and 20 cm (+ 0,2 cm)
- Seat width under 30 cm: Front castor wheel width range: 2,5 cm and 8 cm
- End user to specify castor with and diameter
- Stem to be fastened to the fork with thread and nut system to allow for re-fastening and adjusting.

Rear wheels and axles:

- Size 12” standard chair and larger: Minimum 24” x 1 3/8 diameter with one-part semi-solid tyre
- Size 12” short chair and smaller: Minimum 20” x 1 3/8 diameter with one-part semi-solid tyre or foam insert
- Optional pneumatic tyre
- To be fitted with quick-release axle

Anti-tip wheels:

- Must be removable
- Should allow for adjustability to match the level of independence and balance of the user. Range of adjustability to allow for stability in static position and to adjust for the required degree of stability in propulsion and if applicable, when front castors are raised for obstacle clearance.

Footrest:

- Height adjustable hanger with minimum 15 cm range (10 cm on 12" chair and smaller) to allow for variations in user profile and seat length adjustments
- Must flip-up / fold up or must be detachable
- Should allow for age-appropriate hip abduction
- Will be constructed of rigid moisture and corrosion resistant material and must have a non-slip surface (e g. Rubber).

Lap Tray:

- Removable
- Height adjustable
- Basic, not padded. Vinyl covered
- To support elbows

Guarantee:

- Frame and seat system guaranteed for a minimum of 2 years from date of issue to end user.

General requirement:

- In the technical specifications where more than 1 option is provided: Bidder must be able to provide wheelchair with all of options as specified. The end user will specify the desired option at the time of ordering. The different options stated within each technical specification description must be fully interchangeable and available at the same price. Where the end user does not specify options the wheelchair will be issued as in the option listed first.
- No part or component may be changed / deviate from the technical specifications set out in this document.
- Bidder to submit accredited test report to ensure device durability

1.8.1 C CUSTOMISING OPTIONS FOR ADJUSTABLE POSTURE SUPPORT CHAIRS, SELF-PROPELLING, WITH MODULAR DETACHABLE SEATING SYSTEM

1.8.1 C.1 Tray Table Basic

Size Range: To fit posture chair in the above category

Description:

- Easily removable multipurpose tray
- Provides stable non-slip surface
- When attached, the surface should provide adequate full resting support for the elbows
- When attached, the curves around the body should be cut in such a way as to prevent a large opening between the body and the tray where the elbow, forearms or hands can slip through.

Thickness: Between 0.6 cm and 1.5cm

Material: Wood, plastic with washable vinyl top

Quality: Smooth, washable, splinter free surface

1.8.1 C.2 Tray Table Padded

Size Range: To fit posture chair in the above category

Description:

- Easily removable multipurpose tray
- Provides stable, dynamic, non-slip surface
- When attached, the surface should provide full resting support for the elbows
- When attached, the curves around the body should be cut in such a way as to prevent a large opening between the body and the tray where the elbow, forearms or hands can slip through.

Thickness: Between 2.0cm and 3.0cm

Material: Wood or plastic inner, 2.5mm high density compressed (reconstituted flexible PU) foam with washable stretch vinyl top – fully upholstered

1.8.1 C.3 Head support, adjustable, basic occipital support only

- Minimum 2 sizes, small and standard
- Easily removable
- Height and depth adjustable
- Kidney shaped head support flexible and rake adjustable
- Moulded and padded
- Washable

1.8.1 C.4 Head support, adjustable, occipital and side support

- Minimum 2 sizes, small and standard
- Easily removable
- Height and depth adjustable
- Flexible and rake adjustable
- Moulded and padded
- Washable

1.8.1 C.5 Chest Strap

- Poly-cotton webbing, 10 cm
- Two separate sections, adjustable, with 2 x 50mm D-ring (chromium plated, galvanised steel) male and female Velcro Loop Velcro immediately adjacent to hook Velcro
- Padding) attached to D-ring section, , extending beyond the D-ring and width of strap

1.8.1 C 6 Knee straps with attachments for modular seating system

- Poly-cotton webbing,
- One section
- Length adjustable.
- 2 x 5cm D-ring steel, epoxy coated to be attached to the seat mould
- Adjustable webbing sections with female hook and loop fasteners to be 20cm long.
- Hook 30cm long on both ends, with loop 30cm long immediately adjacent to hook loop. Padding attached to contact areas of webbing.

1.8.1 C 7 Pelvic straps with attachments for modular seating system

- Poly-cotton webbing, 5cm wide.
- Two separate sections, one non-adjustable, other section adjustable.
- Non-adjustable section fitted with 5cm D-ring (chromium plated, galvanise steel) and other with male and female hook and loop fasteners.
- Size specific (12” and smaller = 3cm,14” and larger 5cm) - to fit seating systems above hook on one end, with loop immediately adjacent to hook. Padding attached to D-ring section, 6cm wide, 50cm long of which half extending beyond the D-ring.

1.8.1 C 8 Footbox raiser for modular seating system.

- To clip onto the existing footrest of the above seating system. Raise the back and side height by approximately 10cm, preventing the feet kicking out of the footrest. Provide firm scuff resistant padding on back and side surfaces.

1.8.1 C 9 Adduction boards for modular seating system (specify size)

1.8.1 C.10 Mobile (wheeled) compact base for seating system from range 1.8.2

- Incorporating wheels and/or castors on the four corners. Castors should be lockable or a minimum of 2 wheels will be supplied with locks or brakes.
- COG adjustable to safely accommodate recline and tilt options

1.8.1 C.11 Motorised base frame only - Front wheel or rear wheel drive with electronic hand control system for use with removable posture support system

Size options: To fit chairs:

- Seat width 17 cm – 23 cm, depth 18 cm – 28 cm, height 28 cm – 39 cm
- Seat width 17 cm – 2,7 cm, depth 23 cm – 34 cm, height 35 cm – 45 cm
- Seat width 22 cm – 28 cm, depth 29 cm – 38 cm, height 36 cm – 46 cm

Frame:

- Accommodate COG adjustment
- Anti-tip levers
- Frame material - mild steel to be of a minimum yield of 375 MPA and a minimum tensile strength of 400 MPA.
- Finish: Epoxy coated

Castor and forks:

- 8” x 2” (20 cm x 5 cm) castor with plastic hub.
- Cast Aluminium fork, with top 1 cm and sides tapering to 0.4 cm.
- Forks to be attached to the castor stem by means of bolt system to allow for re-fastening of the stem.

Drive wheels and axles:

- Minimum 12”x2” diameter tyres with deep treads.
- Can be changed manually from drive to free wheel through Dog clutch or Gear box release mechanism

Size range:

- To fit posture chair in the above category

Description:

- Easily removable multi-purpose tray
- When attached, the extensions should provide full resting support for the elbows.
- When attached, the curve around the body should be cut to prevent a large opening between the body and the tray where the elbows, forearms or hands can slip through.

Material: 0.8cm-1.5cm see through polycarbonate or acrylic type sheet
Quality: Smooth, washable, non-breakable, transparent

Controller:

- Electronic sensitivity – programmable speed and sensitivity control system
- Position adjustable vertical and horizontal
- Left- or right-hand control as specified by end user

Batteries:

- 2 x 12-volt sealed lead acid batteries
- Deep cycle 38 Amp hour sealed batteries and dedicated charger

Motors:

- DC motors 24 volt, 240- 320 peak Watt,
- Gear ratio 1:32

Speed:

- Top speed 6 km/h

Range:

- Average range 13 – 16 km

Guarantee:

- Frame and crossbars guaranteed for a minimum of 2 years from date of issue to end user.
- Electronics and motors guaranteed for a minimum of 1 year from issue during appropriate use as stated per category

Repair/ tool kit:

- 4 Rear wheel: bearings
- 4 Castors axle bearings
- 4 castor stem bearings
- Adjustment tools

Tray table –See through type- Supplied standard with the powerbase

- Tray tables Removable- wood with vinyl (not padded), height and depth adjustable, to fit seating support system
- Tray tables Removable- wood with vinyl (padded), height and depth adjustable, to fit seating support system
- Tray tables Removable- perspex , height and depth adjustable, to fit seating support system

1.8.2 PEDIATRIC SEATING SYSTEM: SELF PROPELLING SELF-PROPELLING PAEDIATRIC WHEELCHAIR WITH ADJUSTABLE POSTURE SUPPORT BACKREST

Size range:

- 45cm (18”) wide with adjustable seat frame length 35 – 45cm
- 41cm (16”) wide with adjustable seat frame length 35 – 45cm
- 36 cm (14”) wide with adjustable seat frame length 35 – 45cm
- 36cm (14”) wide with adjustable seat frame length 25 – 35cm
- 30cm (12”) wide with adjustable seat frame length 30 – 40cm
- 30cm (12”) wide with adjustable seat frame length 25 – 35cm
- 25cm (10”) wide with adjustable seat frame length 22 – 35cm
- 20cm (8”) wide with adjustable seat frame length 17 – 25cm

Frame:

- Rigid, mild steel or aluminium

Backrest/seat configuration:

- Seat tilt: Adjustable range up to 20 degrees
- Back post recline: Adjustable range up to 35 degrees
- Seat/backrest configuration is detachable from the wheels/frame to allow for transportability

Upholstery:

- All upholstery should be washable and removable

Seat cushion:

- Pressure relief cushion with Dual layer foam construction, high density foam top layer of 5cm thickness and high density compressed foam bottom layer of 5cm thickness

Armrests:

- Removable or detachable
- Shape of armrests should in no way impede the fitment of commercial rigid adjustable backrest systems
- Optionally integrated into tray table support

Castors and forks:

- 5cm minimum width of castors

Rear wheels and axles:

- 24” x 1 3/8 spoke with one-part semi-solid tyre on 18” wide chair up to 12” 30-40cm wide chairs
- 22” x 1 /38 spoke wheels with one part semi-solid tyre on 8” wide chair up to 12” 25-35cm wide chairs

Footrest:

- Integrated into the backrest seat configuration or frame
- Height adjustable appropriate to width of chair
- Flip-up or detachable
- Footplate to be hard heavy-duty plastic, or aluminium, or mild steel

Pelvic strap:

- Pelvic strap should be 2.5-4cm in width with padding, D-ring loop and hook and loop fasteners
- Adjustable for length

Guarantee:

- Frame and seat system guaranteed for a minimum of 2 years from date of issue to end user.

Weight of user:

- Maximum user weight should not exceed 70kg, appropriate to the size of the chair

Optional Extras

- Head Support
- Complex head support height and depth and rake adjustable, to fit modular seating support system, flexible, moulded and padded

Tray tables

- Tray tables Removable- wood with vinyl (not padded), height and depth adjustable, to fit seating support system
- Tray tables Removable- wood with vinyl (padded), height and depth adjustable, to fit seating support system
- Tray tables Removable- perspex , height and depth adjustable, to fit seating support system

General requirement:

- In the technical specifications where more than 1 option is provided: Bidder must be able to provide wheelchair with all of options as specified. The end user will specify the desired option at the time of ordering. The different options stated within each technical specification description must be fully interchangeable and available at the same price. Where the end user does not specify options the wheelchair will be issued as in the option listed first.
- No part or component may be changed / deviate from the technical specifications set out in this document.
- Bidder to submit accredited test report to ensure device durability

1.9 MOTORISED FOLDING FRAME WHEELCHAIRS

1.9.1 MOTORISED WHEELCHAIRS, FOLDING FRAME, STANDARD BACK HEIGHT WITH HAND CONTROL

1.9.2 MOTORISED WHEELCHAIRS, FOLDING FRAME, TALL BACK HEIGHT WITH HAND CONTROL

1.9.3 MOTORISED WHEELCHAIRS, ADJUSTABLE FOLDING FRAME, WITH ADJUSTABLE TILT IN SPACE WITH HAND CONTROL

Size range for standard (1.10.1) and tall (1.10.2) back height motorised wheelchairs

- 51 cm (20") wide
- 46 cm (18") wide
- 43 cm (17”) wide
- 41 cm (16") wide
- 38 cm (15") wide
- 36 cm (14") wide
- 34 cm (13") wide with 40 cm seat frame length
- 34 cm (13") wide with 30 cm seat frame length
- 30 cm (12”) wide with 30 cm seat frame length

Backrest / Seat configuration:

- Seat tilt: 5 degrees minimum and 8 degrees maximum (approximate minimum of 3.5cm and maximum of 5.7cm front and rear seat height differential on 40cm seat length).
- Back to seat angle not to exceed 90 degrees.
- 8-10 degrees bend in back post.
- Standard back height: 42.5cm ± 2.5cm or max 45cm on all. Exception - 30cm (12") wide with 30cm seat frame length which is 32.5cm ± 2.5cm or maximum 35cm.
- Tall back height: 52.5cm ± 2.5cm or maximum 55cm on all. Exception - 30cm (12") wide with 30cm seat frame length which is 42.5cm ± 2.5cm or maximum 45cm.
- Seat length: standard = 40cm + 1cm long on all wheelchairs with 40cm seat frame. Shorter length may be specified by end user. Exception - 30cm + 1cm long on 30cm (12") wide with 30cm seat frame length.

Upholstery:

- Back upholstery: Tension adjustable back upholstery. 3-piece tension adjustable as specified under tension adjustable backrests in this technical specification.
- Seat upholstery: Nylon (600 D or stronger) or vinyl (40cm long or any shorter length as specified). All back and seat upholstery to be reinforced with an inner PVC minimum technical specification of 500 g/m². (Re-enforced wheelchairs as specified will therefore have a second, outer layer of PVC for additional reinforcement. Reinforcement by means of strips not acceptable).

Armrests:

- Removable, height adjustable desk or full armrest
  mild steel/ durable plastic skirt guard.
- Arm rest sockets to be on side of seat rail only.
- Shape of arm rests may in no way impede the fitting of commercial rigid adjustable back systems onto back posts.

Castors and forks:

- 8x2" (20cm x 5cm) castors with aluminium hub, and outer shore hardness of 65-70 and inner shore hardness of 33-70, with the inner value not exceeding the outer value. Alternative 8x2" (20cm x 5cm) rubber castors.
- Forks to be minimum 0.4cm thick mild steel forks. Stem to be fastened to the fork with a thread and nut system to allow for re-fastening.

Rear wheels and axles:

- 31cm x 5cm (12" x 2") Semi solid tyres with deep treads. Can be changed manually from drive to free wheel through dog clutch or gear box release mechanism.

Footrest hangers:

- Extra-short (15cm), short (20cm), long (25cm) or fully detachable 90-degree hangers with angle adjustable footplates as specified by end user.

Footrest:

- Footplate to be hard heavy-duty plastic, or aluminium, or mild steel, and height adjustable. Swing away

Leg strap:

- Nylon strap (4cm-5cm wide) with hook and loop fasteners. The leg strap should have hook and loop fasteners fitted to its full length to allow maximum adjustability.

Controller:

- Adjustable vertical and horizontal position.
- Chin left or right-hand control as specified by end user (the chin control in this instance will be a hand controller positioned at the chin).

Battery tray:

- Removable.
- Batteries x 12 volt sealed lead acid batteries x 36 AH batteries (minimum requirement).
- Motor strength 2 x 280 – 350 Watt.
- Charger included standard with surge protector.
- Brakes.
- Fully automatic magnetic safety brakes.

Speed:

- Top speed 6 km/h.

Range:

- Average range 13-16 km.
- Grade climbing up to12 degrees.

Guarantee:

- Frame and crossbars guaranteed for a minimum 2 year guarantee from date of issue to end user.
- Electronics and motors guaranteed for a minimum of 1 year from issue during appropriate use as stated per category

Weight:

- Not to exceed 70kg (complete). Allow +1kg with rubber castors.

Weight of user:

- Visibly marked on each wheelchair to indicate maximum weight load of end user.

Repair / tool kit:

- 4 Rear wheel: bearings
- 4 Castors: axle bearings
- 4 castor stem bearings
- 4 seat guides (where applicable)
- Adjustment tools

General requirement:

- Bidder must be able to provide wheelchair with all abovementioned options. The end user will specify the desired option at the time of procuring. The different options available within each technical specification description must be fully interchangeable and available at the same price. Where the end user does not specify options the wheelchair will be issued as in the option given first for the categories with more than one option.
- No part or component may be changed / deviate from the technical specifications set out in this document.
- Bidder to submit accredited test report to ensure device durability

Frame:

- Basic, non-adjustable folding frame.
- Anti-tip levers.
- Frame material - mild steel to be of a minimum yield of 375 MPa and a minimum tensile strength of 400 MPa.
- Frame to be zinc phosphate rust protected prior to powder coating.
- Finish: Epoxy coated.
- Back rest metal tubing wall thickness to be 0.16cm.
- X-bars to be constructed of tubing with a minimum of 2.5cm diameter and 0.2cm wall thickness.

1.9.4 MOTORISED WHEELCHAIRS, ADJUSTABLE FOLDING FRAME WITH ADJUSTABLE TILT IN SPACE AND ADJUSTABLE BACKREST HEIGHT

Size range:

- 51 cm (20") wide with 43 + 1 cm seat frame length
- 46 cm (18") wide with 43 + 1 cm seat frame length
- 43 cm (17”) wide with 43 + 1 cm seat frame length
- 41 cm (16") wide with 43 + 1 cm seat frame length
- 38 cm (15") wide with 43 + 1 cm seat frame length
- 36 cm (14") wide with 43 + 1 cm seat frame length
- 30 cm (12") wide with 43 + 1 cm seat frame length
- 30 cm (12") wide with 33 + 1 cm seat frame length
- 25 cm (10") wide with 33 + 1 cm seat frame length

Backrest / Seat configuration:

- Seat tilt: Adjustable, secondary to centre of gravity adjustment of wheelchair.
- Back to seat angle not to exceed 90 degrees.
- Angle in back post to be 8-10 degrees.
- Back height: Adjustable 35cm-45cm, 40cm-50cm and 45cm-55cm. The back range of the 2 smallest sizes is 35cm-45cm only and has the 8-10 degrees bend in the back post.
- Seat length:
  - ✓ Standard = 40cm + 1cm long as standard, with option to be fitted with 44cm+ 1cm seat on 43cm seat rail.
  - ✓ For the 12” with 33cm seat rail, the standard = 30cm + 1cm long as standard, with option to be fitted with 33cm + 1cm seat.
  - ✓ For the 10“ with 33cm seat rail, the standard = 25cm + 1cm long as standard. Shorter length may be specified by end user.

Centre of gravity adjustability:

- Adjustable by adjusting rear wheel position horizontally and vertical (at least 3 settings each way).
- Adjustable by adjusting rear wheel - at least 3 settings for vertical and horizontal.
- The adjustment range of the front castor should ensure that the castor stem always remains perpendicular to the ground within the available tilt in space range.

Upholstery:

- Back upholstery: Tension adjustable back upholstery. 3-piece tension adjustable with major components and quality as specified under tension adjustable backrests in this technical specification.
- Seat upholstery: Nylon (600 D or stronger) (40cm long or any shorter length as specified). All seat upholstery to be reinforced with an inner PVC minimum technical specification of 500 g/m².

Armrests:

- Removable height adjustable desk or full armrests
- mild steel/ durable plastic skirt guard.
- Arm rest sockets to be on side of seat rail only.
- Shape of arm rests may in no way impede the fitting of commercial rigid adjustable back systems onto back posts.

Castors and forks:

- 8x1" (20cm x 2.5cm) or 8x2" (5cm x 20cm) castors as specified by end user.
- 8x2" (20cm x 5cm) castors with plastic hub, outer shore hardness of 65-70 and inner shore hardness of 33-70, with the inner value not exceeding the outer value.
- Matching adjustments of the front castor to equal any adjustments done to the rear wheel position.
- Forks to be minimum 0.4cm thick mild steel forks. Stem to be fastened to the fork with a thread and nut system to allow for re-fastening.

Rear wheels and axles:

- 31cm x 5cm (12" x 2") Semi solid tyres with deep treads. Can be changed manually from drive to free wheel through dog clutch or gear box release mechanism.
- Vertical and horizontal adjustments of rear wheel (at least 3 settings each way).

Footrest hangers:

- Extra-short (15cm), short (20cm), long (25cm) or fully detachable 90-degree hangers with angle adjustable footplates as specified by end user. Swing away

Footrest:

- Footplate to be hard heavy-duty plastic, or aluminium, or mild steel, and height adjustable. Flip up

Leg strap:

- Nylon strap (4cm-5cm wide) with hook and loop fasteners. The leg strap should have hook and loop fasteners fitted to its full length to allow maximum adjustability.

Controller:

- Adjustable vertical and horizontal position.
- Chin left or right-hand control as specified by end user (the chin control in this instance will be a hand controller positioned at the chin).

Battery tray:

- Removable.
- Batteries x 12 volt sealed lead acid batteries x 36 AH batteries (minimum requirement).
- Motor strength 2 x 280-350 Watts.
- Charger included standard with surge protector.

Brakes:

- Fully automatic magnetic safety brakes.

Speed:

- Top speed 6 km/h.

Range:

- Average range 13-16 km.
- Grade climbing up to12 degrees.

Guarantee:

- Frame and crossbars guaranteed for a minimum 2 year guarantee from date of issue to end user.
- Electronics and motors guaranteed for a minimum of 1 year from issue during appropriate use as stated per category

Frame:

- Adjustable, folding frame.
- Aluminium / mild steel.
- 30cm (12") wide with 33 + 1cm seat frame length and 25cm (10") wide with 33cm + 1cm seat frame length has shorter wheelbase and overall length as the other sizes in this range.

Weight:

- Not to exceed 70kg (complete), Allow +1kg with rubber castors.

Weight of user:

- Visibly marked on each wheelchair to indicate maximum weight load of end user.

Repair / tool kit:

- 4 rear wheels: bearings
- 4 castors: axle bearings
- 4 castor stem bearings
- 4 seat guides (where applicable)
- Adjustment tool

General requirement:

- Bidder must be able to provide wheelchair with all abovementioned options. The end user will specify the desired option at the time of ordering. The different options available within each technical specification description must be fully interchangeable and available at the same price. Where the end user does not specify options the wheelchair will be issued as in the option given first for the categories with more than one option.
- No part or component may be changed / deviate from the technical specifications set out in this document.
- Bidder to submit accredited test report to ensure device durability

1.9. C. CUSTOMISING OPTIONS FOR MOTORISED WHEELCHAIRS

1.9. C.1 Dedicated chin controller:

Dedicated chin controller. On chin mount with adjustable vertical and horizontal position. This option must fit onto item of 1.10.

1.9.C.2. Option to accommodate extra thigh length using any one the following:

1.9.C.2.1 For sizes 12" with standard frame and 14" and larger: Seat depth (extension): 43cm +1cm; 45cm +1cm ; 47cm+1cm ;49 cm +1.
For sizes: 12" with 33cm seat frame: 33cm +1cm seat extension
For sizes: 10" with 33cm seat frame : 30cm +1cm seat extension

1.9.C.2.2 Long wheelchair frame

1.9.C.2.3 Frame with seat depth adjustability range. Minimum 40cm-50cm. End user to specify option and seat depth and frame length.

1.9. C.3 Bolt on footrest (pair)

Small footplate (15 x 13cm) without hanger, with attachment to be fitted directly onto side frame of wheelchair. This option must fit onto items 1.9 and 1.10.

1.9.C.4 Adjustable folding frame with an adjustable recline back post

Adjustable back to seat angle 90º-105º. Adjustment mechanism adjustable with minimum 3 adjustment increments of 5º((0º, -5º, -10º, -15º)

1.9. C.5 Elevating footrest hanger (pair)

Angle of footrest hanger to be adjustable between 0 degrees and 70 degrees of flexion; Height adjustable calf support; Fitted with adult, narrow or juvenile footplates as specified by end user. To be ordered as a pair. This option must fit onto items 1.9 and 1.10.

1.9. C.6 Elevating footrest hanger (individual)

Angle of footrest hanger to be adjustable between 0 degrees and 70 degrees of knee flexion; Height adjustable calf support; Fitted with adult, narrow or juvenile footplates as specified by end user. To be ordered as an individual item. This option must fit onto items 1.9 and 1.10.

1.9. C.7 Head support, adjustable, basic occipital support only

Easily removable
Height and depth adjustable
Kidney shaped head support flexible and rake adjustable
Padded and covered in heavy gauge, removable, washable fabric.
This option must be compatible with option 1.9.3.C.9 and also fit on item 1.10

1.9.3. C.8 Head support, complex adjustable (hand shaped)

Easily removable
Height and depth adjustable
4-point, hand shaped head support, flexible and rake adjustable
Moulded and padded (EVA)
This option must be compatible with option 1.9.3.C.9 and also fit on item 1.10

1.9.3. C.9 Removable universal head rest with horizontal mounting bar

Universal bar that attaches in a horizontal position onto the back post/handles of the wheelchair to be fitted with a removable head rest. Mounting to the wheelchair: Quick release mechanism to allow folding of wheelchair. Secure attachment to ensure safety when used as push handle. Mount for head rest: Adjustable mount to allow 4cm +- 1cm offset left and right from central position. Should be adjustable. This option must fit on item of 1.10.

1.9.3 C.10 Footrest with 90 degrees hangers

Footplate of footrests with 90 degrees hangers only in aluminium/mild steel or hard heavy-duty plastic, must be height/ angle/ forward/ backward adjustable.

1.9.3 C.11 Adjustable backrest height ranges

35 – 45 cm (straight back posts), 40 – 50 cm (straight back posts), 45 – 55 cm (straight back posts)

1.10 MOTORISED HEAVY-DUTY RIGID FRAME WHEELCHAIRS

Size range:

- 51 cm (20") standard, Seat 51 cm wide x 40 cm – 50 cm deep
- 46 cm (18") standard, Seat 46 cm wide x 40 cm – 50 cm deep
- 43 cm (17") standard, Seat 41 cm wide x 40 cm – 50 cm deep
- 41 cm (16") standard, Seat 41 cm wide x 40 cm – 50 cm deep
- 36 cm (14") standard, Seat 36 cm wide x 40 cm – 50 cm deep

Backrest / Seat configuration:

- Seat system tilt (back and seat unit combined): Manual, adjustable tilt in space.
- Seat system tilt in space infinitely adjustable between 0 and minimum 20 degrees.
- Centre of gravity settings a range of 4x2 adjustments (8 total settings).
- Seat back angle at pelvis not to exceed 90 degrees.
- Adjustable seat height ranges from 45cm-50cm, measured at rear of seat at 0-degree tilt.
- Backrest height, measured from rear of seat, 45cm-65cm adjustable range. Push handle may in no way affect posture / set-up of back support system.
- Minimum 10-degree bend in back post to accommodate thoracic spine or designed in such a way to accommodate the back system at the required degree of recline without causing any restriction / interference with posture.
- Seat length adjustable forward by a minimum of 15cm from minimum length.
- Strap: Pelvic, angle at 45 degrees over hips.

Upholstery:

- Back upholstery: Tension adjustable back upholstery. 3-piece tension adjustable with major components and quality as specified under tension adjustable backrests in this technical specification.
- Seat upholstery:
  - ✓ Seat base material to be moisture and corrosion resistant and must provide rigid support.
  - ✓ Length adjustable as specified under size range above.

Armrests:

- Removable full or desk with mild steel skirt guard.
- Shape of arm rests may in no way impede the fitting of commercial rigid adjustable back systems onto back posts.

Castors and forks

- 9” x3" (23cm x 7.5cm) or 8x2" (20cm x 5cm) castors with aluminium hub, and outer shore hardness of 65-70 and inner shore hardness of 33-70, with the inner value not exceeding the outer value. Castors as specified by end user.
- Matching adjustments of the front castor to equal any adjustments done to the rear wheel position.
- Forks to be minimum 0.4cm thick mild steel forks. Castor stems need to be between 1.5cm-1.7cm. Stem to be fastened to the fork with a thread and nut system to allow for re-fastening.

Rear wheels and axles:

- 11”-14.5” diameter x 3.5” width, solid or pneumatic tyres. Can be changed manually from drive to free wheel through dog clutch or gear box release mechanism.

Anti-tip levers:

- Removable or flip up and adjustable in length 10cm x 3.5cm (4”x 1.4”).

Footrest hangers:

- Extra-short (15cm), short (20cm), long (25cm) or fully detachable 90-degree hangers with angle adjustable footplates as specified by end user.

Footrest:

- Footplate to be hard heavy-duty plastic, or aluminium, or mild steel, and height adjustable.

Leg strap:

- Nylon strap (4cm-5cm wide) with hook and loop fasteners. The leg strap should have hook and loop fasteners fitted to its full length to allow maximum adjustability.

Controller:

- Adjustable vertical and horizontal position.
- Chin left or right-hand control as specified by end user.

Battery tray:

- Removable

Batteries:

- x 12 volt sealed lead acid batteries
- Minimum capacity 2 x 48 AH batteries (minimum requirement)
- Minimum Motor strength 2 x 450-700 Watts
- Minimum amperage 50+ Amp
- Charger included 6 Amp standard with surge protector

Brakes:

- Fully automatic magnetic safety brakes.

Speed:

- Average speed 6+ km/h

Range:

- Average range 20+ km
- Grade climbing up to 15 degrees

Guarantee:

- Frame and crossbars guaranteed for a minimum 2 year guarantee from date of issue to end user.
- Electronics and motors guaranteed for a minimum of 1 year from issue during appropriate use as stated per category

Frame:

- Rigid frame.
- Seat system tilt in space infinitely adjustable between 0 and minimum 20 degrees (Seat system to tilt as unit).
- Tilt and recline mechanisms may not interfere with the fitting of postural support systems.
- Aluminium / mild steel.
- Wheelbase is measured with castor fork pointing back to rear wheel from centre of castor to centre of rear wheel along the horizontal plane 46cm.

Weight:

- With battery: not to exceed 120kg.
- Without battery: not to exceed 90kg.

Weight of user:

- Visibly marked on each wheelchair to indicate maximum weight load of end user.

Repair / tool kit:

- 4 rear wheels: bearings
- 4 castors: axle bearings
- 4 castor stem bearings
- 4 seat guides (where applicable)
- Adjustment tool

General requirement:

- Bidder must be able to provide wheelchair with all abovementioned options. The end user will specify the desired option at the time of ordering. The different options available within each technical specification description must be fully interchangeable and available at the same price. Where the end user does not specify options the wheelchair will be issued as in the option given first for the categories with more than one option.
- No part or component may be changed / deviate from the technical specifications set out in this document.
- Bidder to submit accredited test report to ensure device durability

1.10. C CUSTOMISING OPTIONS MOTORISED HEAVY-DUTY RIGID FRAME WHEELCHAIRS

1.10. C.1 Dedicated chin controller:

Dedicated chin controller. On chin mount with adjustable vertical and horizontal position. This option must fit onto item 1.10.

1.10. C.2 45cm and 47.5cm seats extension

45cm and 47.5cm seats, with seat frame extension kit and full-length extended seat upholstery (short strip of upholstery not allowed) to lengthen original seat frames and seat. Upholstery screws to be provided. This option must fit onto item 1.10 and should be available in each size.

1.10. C.3 Bolt on footrest (pair)

Small footplate (15cm x 13cm) without hanger, with attachment to be fitted directly onto side frame of wheelchair. This option must fit onto item 1.10.

1.10. C.4 Elevating footrest hanger (pair)

Angle of footrest hanger to be adjustable between 0 degrees and 70 degrees of flexion; Height adjustable calf support; Fitted with adult, narrow or juvenile footplates as specified by end user. To be ordered as a pair. This option must fit onto item 1.10.

1.10. C.5 Elevating footrest hanger (individual)

Angle of footrest hanger to be adjustable between 0 degrees and 70 degrees of knee flexion; Height adjustable calf support; Fitted with adult, narrow or juvenile footplates as specified by end user. To be ordered as an individual item. This option must fit onto item 1.10.

1.10. C.6 Footrest with 90 degrees hangers

Footplate of footrests with 90 degrees hangers only in aluminium/mild steel or hard heavy-duty plastic, must be height/ angle/ forward/ backward adjustable.

1.10. C.7 Head support, adjustable, basic occipital support only

Easily removable
Height and depth adjustable
Kidney shaped head support flexible and rake adjustable
Padded and covered in heavy gauge, removable, washable fabric. This option must fit onto item 1.10.

1.10. C.8 Electric tilt with range from 0-45 degrees

This option must fit onto item 1.10.

1.11 BUGGIES

1.11.1 MODULAR, RIGID BUCK, FOAM ADJUSTABLE POSTURE SUPPORT BUGGY WITH RIGID FRAME

Size range:

The sizes below are maximum internal usable measurements of seat mould and exclude postural seating supports but include seat cushion.

- Seat width 25cm, depth 24cm, height 40cm
- Seat width 27cm, depth 24cm, height 40cm
- Seat width 29cm, depth 30cm, height 40cm
- Seat width 32cm, depth 36cm, height 49cm
- Seat width 32cm, depth 45cm, height 54cm
- Seat width 39cm, depth 49cm, height 55cm

All heights increase when optional head extension is utilised.

Seat system:

- Removable fibreglass seating system, padded with 1.2cm high density foam, 1 seat system cover, removable, heavy duty denim twill, machine washable and can be dried in tumble drier.
- Seat back angle not to exceed 98 degrees.
- Tilt in space adjustable up to 30 degrees.
- Pelvic strap length adjustable (both origins and middle), padded. Widths of straps are size appropriate (12” and smaller= 3cm,14” and larger 5cm).
- Modular seating support inserts covered with removable, heavy duty denim twill, machine washable and can be dried in tumble drier. High density (26/20) with hardness factor 18.0-21.6 and density range 24.1-27.
- Seating cushion cover to be waterproof fabric, terry cloth cotton covered, 2-way stretch, breathable, anti-microbial shield treated
- Seat cushion with / without abduction block as specified by end user: Top layer high density foam 5cm thick; 36/20 with hardness factor 18-21.6; Density 32.1-40 kg/m³). Base layer 2.5cm high density compressed (reconstituted flexible Poly Utherane (PU)) foam 1300; Hardness factor 52-63; Density 130±10% kg/m³). (SANS 642-1976). Waterproof, terry cloth cotton covered, 2-way stretch, breathable, anti-microbial shield treatment

Seating support:

- 1 x 5cm back support (exception: baby buggy nil 5cm back supports)
- 2 x 2,5cm back support
- 1 x seat cushion with / without abduction block as specified by end user
- 1 x head support cushion
- 2 x trunk side supports
- 1 seat system cover, removable and washable

Lap tray:

- Easily removable multi-purpose tray and provides stable surface. When attached, the surface extensions should provide support for the elbows.
- When attached, the curve around the body should be cut in such a way to prevent a large opening between the body and the tray where the elbows, forearms or hands can slip through.
- Basic, not padded, vinyl covered.
- To support elbows.
- Height, depth, and angle adjustable independently from tilt in space.

Material:

- Wood (Supawood covered/protected with sealer and wood varnish)/ plastic with washable vinyl top.

Quality:

- Smooth, washable, splinter free surface, splinter proof, rounded edges, easily wipe-able and cleanable.

Castors and forks:

- 8” x 2” (20cm x 5cm) castors with plastic hub.
- Cast Aluminium fork, with top 1cm and sides tapering to 0.4cm.
- Forks to be attached to the castor stem by means of a thread and bolt system to allow for re-fastening of the stem.

Rear wheels and axles:

- Minimum 20cm x 8cm

Footrests:

- Height adjustable, detachable
- Solid with lateral and side supports
- Footplate to be hard heavy-duty plastic, or aluminium, or mild steel, and height adjustable

Frame:

- Mild steel, epoxy coated
- Size folded: Maximum 60cm x 45cm x 50cm

Weight:

- Not to exceed 25kg for largest size

Weight of user:

- Visibly marked on each wheelchair to indicate maximum weight load of end user.

Guarantee:

- Frame and seat system guaranteed for a minimum 2 year guarantee from date of issue to end user.

General requirement:

- In the technical specifications where more than 1 option is provided: Bidder must be able to provide wheelchair with all of options as specified. The end user will specify the desired option at the time of ordering. The different options stated within each technical specification description must be fully interchangeable and available at the same price. Where the end user does not specify options the wheelchair will be issued as in the option listed first.
- No part or component may be changed / deviate from the technical specifications set out in this document.
- Bidder to submit accredited test report to ensure device durability

1.11.1 C CUSTOMISING OPTIONS FOR MODULAR, RIGID BUCK, FOAM ADJUSTABLE POSTURE SUPPORT BUGGY WITH RIGID FRAME

1.11.1. C.1 Tray table basic

Size range: To fit the modular, rigid buck, foam adjustable posture support buggy with rigid frame size range

Description:

- Easily removable multi-purpose tray.
- Provides stable non- slip surface.
- When attached, the surface extensions should provide adequate full resting support for the elbows.
- When attached, the curve around the body should be cut in such a way as to prevent a large opening between the body and the tray where the elbows, forearms or hands can slip through.

Thickness: Between 0.6cm and 1.5cm

Material: Wood (Supawood covered/protected with sealer and wood varnish)/ plastic with washable vinyl top.

Quality: Smooth, washable, splinter free surface, splinter proof, rounded edges, easily wipe-able and cleanable

1.11.1. C.2 Tray table padded

Size range: To fit the modular, rigid buck, foam adjustable posture support buggy with rigid frame size range.

Description:

- Easily removable multi-purpose tray.
- Provides stable, dynamic, non- slip surface.
- When attached, the extensions should provide full resting support for the elbows.
- When attached, the curve around the body should be cut to prevent a large opening between the body and the tray where the elbows, forearms or hands can slip through.
- Height, depth, and angle adjustable independently from tilt in space.

Thickness: Between 2.0cm and 4.0cm

Material: Wood (Supawood covered/protected with sealer and wood varnish) or plastic inner, 2.5cm high density compressed (reconstituted flexible PU) foam with washable stretch vinyl top – fully upholstered, waterproof, material needs to be durable for regular cleaning, and flame retardant and heat resistant.

1.11.1. C.3 Head support, adjustable, basic occipital support only
Easily removable
Height and depth adjustable
Kidney shaped head support flexible and rake adjustable
Padded and covered in heavy gauge, removable, washable fabric

1.11.1. C.4 Head support, adjustable, basic occipital, and side support
Easily removable
Height and depth adjustable
4-point, hand shaped head support, flexible and rake adjustable
Moulded and padded EVA

1.11.1. C.5 Chest strap
Poly-cotton webbing, 6cm or 10cm
Two separate sections, adjustable, with 2 x 3cm or 5cm
D-ring (chromium plated, galvanised steel) male and female loop immediately adjacent to hook
Padding) attached to D-ring section, extending beyond the D-ring and width strap

1.11.1. C.6 Thigh strap
Poly-cotton webbing,
One section
Length adjustable.
2 x 5cm D-ring steel, epoxy coated to be attached to the seat mould
Adjustable webbing sections with female hook and loop fasteners to be 20cm long.
Hook 30cm long on both ends, with loop 30cm long immediately adjacent to hook loop. Padding attached to contact areas of webbing.

1.11.1. C.7 Pelvic straps, adjustable
Poly-cotton webbing, 5cm wide.
Two separate sections, one non-adjustable, other section adjustable.
Non-adjustable section fitted with 5cm D-ring (chromium plated, galvanise steel) and other with male and female hook and loop fasteners.
Size specific (12” and smaller = 3cm,14” and larger 5cm) - to fit seating systems above hook on one end, with loop immediately adjacent to hook. Padding attached to D-ring section, 6cm wide, 50cm long of which half extending beyond the D-ring.

1.11.1. C.8 Foot box raisers
To clip onto the existing footrest of the above seating system.
Raise the back and side height by approximately 10cm, preventing the feet kicking out of the footrest.
Provide firm scuff resistant padding on back and side surfaces.

1.11.1. C.9 Indoor / School base unit only for removable seat
4 brake castors
4 legs – height and tilt adjustable
Seat clips on and off school frame for easy transfer to self-propelling base
Distance of castor feet must match or exceed the footprint of the appropriate size of push frame of seat

1.11.1. C.10

Pad support, postural seating, complete set, washable covers for x-small, small, medium or large positioner buggy.

1.11.2 MODULAR, RIGID ADJUSTABLE POSTURE SUPPORT BUGGY WITH FOLDING FRAME (Positioning Buggy with recline option)

Size range:

- Back height 31cm-41cm; Seat width 18cm; Seat lengths 17cm-26cm; Trunk side support height range 17cm-28cm. Trunk side support width range 16cm-21 cm.
- Back height 28cm-38cm; Seat width 23cm; Seat lengths 24cm-32cm. Trunk side support height range 21cm-28cm. Trunk side support width range 18cm-24cm.
- Back height 37cm-44cm; Seat width 25cm; Seat lengths 29cm-36cm. Trunk side support height range 23cm-33cm. Trunk side support width range 18cm-24cm.
- Back height 40cm-50cm; Seat width 30cm; Seat lengths 37cm-47cm. Trunk side support height range 28cm-35cm. Trunk side support width range 23cm-29cm.

Seat system:

- Removable modular adjustable seating system.
- Aluminium, wood, or plastic padded / lined.
- Trunk side support minimum length 10cm for smallest size / 18cm for largest size.
- Trunk side support independently adjustable vertically and horizontally.
- Padded with a minimum of 0.6cm nonporous/ sealed cell foam.
- Lined/padded with minimum of 0.6cm nonporous/ sealed cell foam.
- Pelvic side support lined/padding of minimum 2cm.
- Removable washable waterproof covers.
- Covers to accommodate customisation of back supports.
- Tilt in space up to 30 degrees.
- Recline - Seat to back angle adjustable in range 90 to 120 degrees.
- Pelvic strap length adjustable, padded.
- Seating systems allows for adaptation, build-up and customisation.
- Seat cushion with / without abduction block as specified by end user: Top layer high density foam 2.5cm - 5cm thick; 36/20 with hardness factor 18-21.6; Density - 32.1-40kg/m³). Base layer 2.5cm high density compressed (reconstituted flexible PU) foam 1300; Hardness factor 52-63; Density130+10% kg/m³). (SANS 642-1976). Waterproof 2-way stretch, breathable cover with anti-microbial shield treatment.
- Head extension – height and depth adjustable, offering minimum occipital side head support.
- Footrest height and depth adjustable in relation to seat length.

Lap tray:

Size range: To fit posture support buggies in the above category

Description:

- Easily removable (user should be able to fit and remove table by themselves), multi-purpose tray and provides stable surface. When attached, the surface extensions should provide support for the elbows.
- When attached, the curve around the body should be cut in such a way to prevent a large opening between the body and the tray where the elbows, forearms or hands can slip through. Height, depth, and angle adjustable independently from tilt in space.

Thickness: Between 0.6cm and 1.5cm
Material: Wood (Supawood covered/protected with sealer and wood varnish)/ plastic with washable vinyl top
Quality: Smooth, washable, splinter free surface, splinter proof, rounded edges, easily wipe-able and cleanable

Footrest:

- Solid with side supports/ foot straps.
- Height and depth adjustable.

Frame:

- Folding frame
- Mild Steel, epoxy coated
- Size folded

Castors and forks:

- 8” x 2” (20cm x 5cm) castor wheel width between 40cm and 8cm with plastic hub.
- Cast aluminium fork, with top 1cm and sides tapering to 0.4cm.
- Forks to be attached to the castor stem minimum 1.2cm thick bolt system to allow for re-fastening of the stem.

Rear wheels:

- Minimum 20cm x 8cm pneumatic or solid
- Range from 8”x3” to 24”x1 3/8

Weight:

- Not to exceed 25kg for largest size

Weight of user:

- Visibly marked on each wheelchair to indicate maximum weight load of end user.

Guarantee:

- Frame and seat system guaranteed for a minimum 2 year from date of issue to end user.

General requirement:

- In the technical specifications where more than 1 option is provided: Bidder must be able to provide wheelchair with all of options as specified. The end user will specify the desired option at the time of ordering. The different options stated within each technical specification description must be fully interchangeable and available at the same price. Where the end user does not specify options the wheelchair will be issued as in the option listed first.
- No part or component may be changed / deviate from the technical specifications set out in this document.
- Bidder to submit accredited test report to ensure device durability

1.11.2 C CUSTOMISING OPTIONS FOR MODULAR, RIGID ADJUSTABLE POSTURE SUPPORT BUGGY WITH FOLDING FRAME

1.11.2. C.1 Tray table basic

Size range: To fit modular, rigid adjustable posture support buggy with folding frame size range.

Description:

- Easily removable multi-purpose tray.
- Provides stable non- slip surface.
- When attached, the surface extensions should provide adequate full resting support for the elbows.
- When attached, the curve around the body should be cut in such a way as to prevent a large opening between the body and the tray where the elbows, forearms or hands can slip through.

Thickness: Between 0.6cm and 1.5cm

Material: Wood (Supawood covered/protected with sealer and wood varnish)/ plastic with washable vinyl top.

Quality: Smooth, washable, splinter free surface, splinter proof, rounded edges, easily wipe-able and cleanable

1.11.2. C.2 Tray table padded

Size range: To fit modular, rigid adjustable posture support buggy with folding frame size range.

Description:

- Easily removable multi-purpose tray.
- Provides stable, dynamic, non- slip surface.
- When attached, the extensions should provide full resting support for the elbows.
- When attached, the curve around the body should be cut to prevent a large opening between the body and the tray where the elbows, forearms or hands can slip through.
- Height, depth, and angle adjustable independently from tilt in space.

Thickness: Between 2.0cm and 4.0cm

Material: Wood (Supawood covered/protected with sealer and wood varnish) or plastic inner, 2.5cm high density compressed (reconstituted flexible PU) foam with washable stretch vinyl top – fully upholstered, waterproof, material needs to be durable for regular cleaning, and flame retardant and heat resistant.

1.11.2. C.3 Head support, adjustable, basic occipital support only

Easily removable
Height and depth adjustable
Kidney shaped head support flexible and rake adjustable
Padded and covered in heavy gauge, removable, washable fabric

1.11.2. C.4 Head support, adjustable, basic occipital, and side support

Easily removable
Height and depth adjustable
4-point, hand shaped head support, flexible and rake adjustable
Moulded and padded EVA

1.11.2. C.5 Chest strap

Poly-cotton webbing, 6cm or 10cm
Two separate sections, adjustable, with 2 x 3cm or 5cm
D-ring (chromium plated, galvanised steel) male and female loop immediately adjacent to hook
Padding) attached to D-ring section, extending beyond the D-ring and width strap

1.11.2. C.6 Thigh strap

Poly-cotton webbing,
One section
Length adjustable.
2 x 5cm D-ring steel, epoxy coated to be attached to the seat mould
Adjustable webbing sections with female hook and loop fasteners to be 20cm long.
Hook 30cm long on both ends, with loop 30cm long immediately adjacent to hook loop. Padding attached to contact areas of webbing.

1.11.2. C.7 Pelvic straps, adjustable

Poly-cotton webbing, 5cm wide.
Two separate sections, one non-adjustable, other section adjustable.
Non-adjustable section fitted with 5cm D-ring (chromium plated, galvanise steel) and other with male and female hook and loop fasteners.
Size specific (12” and smaller = 3cm,14” and larger 5cm) - to fit seating systems above hook on one end, with loop immediately adjacent to hook. Padding attached to D-ring section, 6cm wide, 50cm long of which half extending beyond the D-ring.

1.11.2. C.8 Foot box raisers

To clip onto the existing footrest of the above seating system.
Raise the back and side height by approximately 10cm, preventing the feet kicking out of the footrest.
Provide firm scuff resistant padding on back and side surfaces.

1.11.2. C.9 Indoor / School base unit only for removable seat

4 brake castors
4 legs – height and tilt adjustable
Seat clips on and off school frame for easy transfer to self-propelling base
Distance of castor feet must match or exceed the footprint of the appropriate size of push frame of seat

1.11.2. C.10

Pad support, postural seating, complete set, washable covers for x-small, small, medium or large positioner buggy.

1.12 PORTER WHEELCHAIRS

1.12.1 PORTER WHEELCHAIRS (INSTITUTIONAL USE)

Size:

- 51 cm (20”) wide

Backrest / Seat configuration:

- Seat tilt: 5 degrees
- Back – seat angle to be 90 degrees
- Seat: Solid, padded
- Back height: 42.5cm +2.5cm or maximum 45cm
- Seat length: 40cm + 1cm

Upholstery:

- Back upholstery: Vinyl
- Seat upholstery: Vinyl solid padded seat (40cm long)

Armrests:

- Removable or flip up desk type with mild steel skirt guard.

Castors and forks:

- 8” x2" (20cm x 5cm) castors with plastic hub, outer shore hardness of 65-70 and inner shore hardness of 33-70, with the inner value not exceeding the outer value.
- Forks to be minimum 0.4cm thick mild steel forks. Stem to be fastened to the fork with a thread and nut system to allow for re-fastening.

Rear wheel:

- 24”x 1 3/8

Footrest hangers:

- Long (25cm) or short (20cm); Fully detachable

Footrests:

- Aluminium; Height adjustable

Foot strap:

- Vinyl strap (4cm-6cm wide) with hook and loop fasteners

Frame:

- Non-folding with stabilizer bar to limit torsion within the frame

Weight of user:

- Minimum weight capacity of 160kg.
- Visibly marked on each wheelchair to indicate maximum weight load of end user.

Guarantee:

- Frame and crossbars guaranteed for a minimum of 2 years from date of issue to end user.

Tool kit:

- Adjustment tool

General requirement:

- Bidder must be able to provide wheelchair with all abovementioned options. The end user will specify the desired option at the time of ordering. The different options available within each technical specification description must be fully interchangeable and available at the same price. Where the end user does not specify options the wheelchair will be issued as in the option given first for the categories with more than one option.
- No part or component may be changed / deviate from the technical specifications set out in this document.
- Bidder to submit accredited test report to ensure device durability

1.12.2 PORTER WHEELCHAIRS (INSTITUTIONAL USE) WITH DRIP STAND HOLDER AND T ROD

Size:

- 51 cm (20”) wide

Backrest / Seat configuration:

- Seat tilt: 5 degrees
- Back – seat angle to be 90 degrees
- Seat: Solid, padded
- Back height: 42.5cm +2.5cm or maximum 45cm
- Seat length: 40cm + 1cm

Upholstery:

- Back upholstery: Vinyl
- Seat upholstery: Vinyl solid padded seat (40cm long)

Armrests:

- Fixed desk type with mild steel skirt guard

Castors and forks:

- 8” x2" (20cm x 5cm) castors with plastic hub, outer shore hardness of 65-70 and inner shore hardness of 33-70, with the inner value not exceeding the outer value.
- Forks to be minimum 0.4cm thick mild steel forks. Stem to be fastened to the fork with a thread and nut system to allow for re-fastening.

Rear wheel:

- 12.5” x 2.25" (30cm x 6.5cm) solid tyres

Footrest hangers:

- Long (25cm) or short (20cm); Fully detachable

Footrests:

- Footplate to be hard heavy-duty plastic, or aluminium, or mild steel, and height adjustable.

Foot strap:

- Vinyl strap (4cm-6cm wide) with hook and loop fasteners

Frame:

- Non-folding with stabilizer bar to limit torsion within the frame
- Height adjustable drip stand with T-bar securely attached to frame

Weight of user:

- Minimum weight capacity of 160kg.
- Visibly marked on each wheelchair to indicate maximum weight load of end user.

Guarantee:

- Frame and crossbars guaranteed for a minimum of 2 years from date of issue to end user.

Tool kit:

- Adjustment tool

General requirement:

- Bidder must be able to provide wheelchair with all abovementioned options. The end user will specify the desired option at the time of ordering. The different options available within each technical specification description must be fully interchangeable and available at the same price. Where the end user does not specify options the wheelchair will be issued as in the option given first for the categories with more than one option.
- No part or component may be changed / deviate from the technical specifications set out in this document.
- Bidder to submit accredited test report to ensure device durability

1.13 COMMODES

1.13.1 BASIC

Frame:

- Rigid frame, Mild steel, Galvanised, Epoxy coated; Constructed in such a way that it can be reversed over a standard toilet bowl.

Size:

- Width range 46cm – 51cm, seat depth 40 cm

Seat:

- Moulded polyurethane seat; with a vinyl wheelchair seat cover; removable bucket system.

Backrest:

- Full length back support in vinyl or nylon; Height 40cm.

Armrests:

- Completely removable, should not form part of the rigid frame.

Footrests:

- Removable

Castors:

- 4 x Lockable, Minimum 5cm diameter

Weight limit:

- Maximum of 130 kg (consider weight limitations for bigger sizes)

Guarantee:

- Frame and crossbars guaranteed for a minimum of 2 years from date of issue during appropriate use as stated per category

General requirement:

- Bidder must be able to provide wheelchair with all of options as specified. The end user will specify the desired option at the time of ordering. The different options stated within each technical specification description must be fully interchangeable and available at the same price. Where the end user does not specify options the wheelchair will be issued as in the option listed first.
- No part or component may be changed / deviate from the technical specifications set out in this document.
- Bidder to submit accredited test report to ensure device durability

1.13.2 ALUMINIUM TOILET AND SHOWER COMMODE (WHEELCHAIR TYPE)

Frame:

- Rigid frame, aluminium frame, epoxy coated; constructed in such a way that it can be reversed over a standard toilet bowl.

Size:

- Width range 46cm – 51cm, seat depth 40 cm

Seat:

- Moulded polyurethane toilet seat shaped; with a vinyl seat cover; removable bucket system.

Backrest:

- Full back length back support; Height 40cm.

Armrests:

- Completely removable

Footrests:

- Removable

Rear mag wheels and axles:

- Quick release, 24x 1 3/8 wheels

Castors:

- Standard 8 x 1” or 8 x 2”

Weight limit:

- Maximum 130kg

Guarantee:

- Frame and crossbars guaranteed for a minimum of 2 years from date of issue during appropriate use as stated per category

General requirement:

- Bidder must be able to provide wheelchair with all of options as specified. The end user will specify the desired option at the time of ordering. The different options stated within each technical specification description must be fully interchangeable and available at the same price. Where the end user does not specify options the wheelchair will be issued as in the option listed first.
- No part or component may be changed / deviate from the technical specifications set out in this document.
- Bidder to submit accredited test report to ensure device durability

1.13.3 COMMODE, WHEELCHAIR TYPE

- Commode must be supplied with bucket attachment, including bucket.
- To comply with the technical specifications in Appendix F attached.

Overall width:

- Over the wheel hubs must not exceed 660mm

Armrest:

- The support must be so hinged on vertical members of the backrest by means of tubular hinges that they can be swung aside.
- It must have means to lock them in the normal position.
- Armrest surface must be of 20mm hardwood with a 75mm width and length of 300mm.

Seat:

- Must be made of at least 15mm laminated wood.

Seat Cover:

- Must be made of laminated wood or plastic.

Frame:

- The frame and armrest support shall be made from mild steel tubes having a nominal outside diameter of at least 25mm with epoxy/nylon powder-coated finish to comply with SANS 778 paragraph 5.2.

Castors:

- Both front castors to be fitted with a locking device.
- Castors must comply to the latest issue of SANS 621.
- Where castors are fitted into steel tubular legs, the tube shall be of wall thickness not less than 2,0mm and castors shall be fixed to the tube by one of the following methods:
  - ✓ Solid plug (long) complying with SANS 621 subsection 3.5.6 or
  - ✓ Screwed into 35mm long sleeves welded into the tubular members and locked in an acceptable manner.
- Rubber or plastic expanding sleeves for fitting castors are not acceptable.
- Provision shall be made on the underside of the seat to hold the slop bucket and to allow its easy insertion and withdrawal.

Guarantee:

- Frame and crossbars guaranteed for a minimum of 2 years from date of issue during appropriate use as stated per category

Accessory:

- Must comply to above technical specification, be compatible and supplied with the main unit.
- 14L Stainless steel slop bucket with hinged handle

General requirement:

- Bidder must be able to provide wheelchair with all of options as specified. The end user will specify the desired option at the time of ordering. The different options stated within each technical specification description must be fully interchangeable and available at the same price. Where the end user does not specify options the wheelchair will be issued as in the option listed first.
- No part or component may be changed / deviate from the technical specifications set out in this document.
- Bidder to submit accredited test report to ensure device durability

1.13.4 FOLDABLE COMMODE

Size:

- Width 46cm,

Frame:

- Aluminium frame, foldable to compact dimensions for ease of transportation and storage
- Height adjustable legs

Seat:

- Moulded polyurethane toilet seat shape for removable bucket system with lid.

Backrest:

- Aluminium frame

Armrests:

- Part of foldable frame with durable plastic arm support.
- Legs to be supported by non-slip rubber base.

Weight limit:

- Maximum 130kg

Guarantee:

- Frame and crossbars guaranteed for a minimum of 2 years from date of issue during appropriate use as stated per category

General requirement:

- Bidder must be able to provide wheelchair with all of options as specified. The end user will specify the desired option at the time of ordering. The different options stated within each technical specification description must be fully interchangeable and available at the same price. Where the end user does not specify options the wheelchair will be issued as in the option listed first.
- No part or component may be changed / deviate from the technical specifications set out in this document.
- Bidder to submit accredited test report to ensure device durability

1.14 TRANSPORTERS

1.14.1 TRANSPORTER BUGGY (FOLDING / COLLAPSIBLE TYPE)

Size range:

- Seat width: 10”, 12”, 14”, 15”
- Approximately 20-40cm

Backrest / Seat configuration:

- Canvas sling type or padded with support structures
- Back height: Approximately 50-120cm
- Seat depth: Approximately 25-45cm

Castors and forks:

- Minimum 5"

Rear wheels:

- Minimum 5"

Brakes:

- Fitted to rear wheels or fitted to handle bar

Footrests:

- Height adjustable
- Fitted to frame
- Detachable/ collapsible for foldable frame

Size folded:

- Maximum 120cm x 48cm x 55cm

Weight:

- Not to exceed 13kg

Weight of user:

- Visibly marked on each device to indicate maximum weight load of end user.

Frame:

- Folding, aluminium
- To include recline option (90 degrees – 160 degrees)
- Collapsible / foldable for storage and transportation
- Datable seat for storage and folding
- Padded inner structures with support for positioning

Guarantee:

- Frame and crossbars guaranteed for a minimum of 2 years from date of issue to end user.

General requirement:

- Bidder must be able to provide wheelchair with all of options as specified. The end user will specify the desired option at the time of ordering. The different options stated within each technical specification description must be fully interchangeable and available at the same price. Where the end user does not specify options the wheelchair will be issued as in the option listed first.
- No part or component may be changed / deviate from the technical specifications set out in this document.
- Bidder to submit accredited test report to ensure device durability

Other:

- To include headrest / head positioner
- To include straps / fasteners over chest or pelvis or hips
- To include storage/carrier bag facility.
- To include canopy cover/ thermal cover/ rain cover
- To include seat belt
- Net basket on backrest
- Semi-rigid seat with inner aluminium supports
- Breathable upholstery

1.14.2 TRANSPORTER WITH SIDE FRAME COVERS

Size range:

- Seat width: 12”,14”,15”
- Approximately 40cm

Backrest / Seat configuration:

- Canvas sling type
- Back height: Approximately 54cm
- Seat depth: Approximately 29cm
- Removable, washable canvas covers on side frames.

Castors and forks:

- Minimum 5"

Rear wheels:

- Minimum 5"

Brakes:

- Fitted to rear wheels

Footrests:

- Height adjustable, removable or swing away

Size folded:

- Maximum 120cm x 48cm x 55cm

Weight:

- Not to exceed 8kg

Weight of user:

- Visibly marked on each wheelchair to indicate maximum weight load of end user.

Frame:

- Folding, aluminium

Guarantee:

- Frame and crossbars guaranteed for a minimum of 2 years from date of issue to end user.

General requirement:

- Bidder must be able to provide wheelchair with all of options as specified. The end user will specify the desired option at the time of ordering. The different options stated within each technical specification description must be fully interchangeable and available at the same price. Where the end user does not specify options the wheelchair will be issued as in the option listed first.
- No part or component may be changed / deviate from the technical specifications set out in this document.
- Bidder to submit accredited test report to ensure device durability

1.14.3 ADULT TRANSPORTER

Size range:

- Seat width of 17” to 18”.

Footrests:

- Height adjustable, flip up or removable.

Armrests:

- Can be swing away, removable, or fixed.

Size folded:

- Must be compactly foldable to about 1/3 of its size, with or without a carrier bag or carrier handles

Weight:

- Approximately 10 to 15 kg

Weight of user:

- Must have a weight limit of at least 100kg.

Frame:

- Made from a lightweight material such as aluminium.

Guarantee:

- Frame and crossbars guaranteed for a minimum of 2 years from date of issue to end user.

General requirement:

- Bidder must be able to provide wheelchair with all of options as specified. The end user will specify the desired option at the time of ordering. The different options stated within each technical specification description must be fully interchangeable and available at the same price. Where the end user does not specify options the wheelchair will be issued as in the option listed first.
- No part or component may be changed / deviate from the technical specifications set out in this document.
- Bidder to submit accredited test report to ensure device durability

END OF CATEGORY 1

2. CATEGORY 2: WHEELCHAIR CUSHIONS AND FOAM

2.1 BASIC FOAM CUSHIONS

2.1.1 CONTOURED BASE - THICK PRESSURE CARE CUSHION

Variance allowed on overall measurement for cushions: +1cm

Size range:

- 61 cm wide; 43 cm long; 9 cm high in front
- 56 cm wide; 43 cm long; 9 cm high in front
- 51 cm wide; 43 cm long; 9 cm high in front
- 46 cm wide; 43 cm long; 9 cm high in front
- 43 cm wide; 43 cm long; 9 cm high in front
- 41 cm wide; 43 cm long; 9 cm high in front
- 38 cm wide; 43 cm long; 9 cm high in front
- 36 cm wide; 43 cm long; 9 cm high in front
- 30 cm wide; 43 cm long; 9 cm high in front
- 30 cm wide; 30 cm long; 6.5 cm high in front
- 25 cm wide; 30 cm long; 6 cm high in front

Description:

- Wheelchair basic foam pressure relieving cushion. Bevelled contoured base to match sling seat of wheelchair.
- Must have trochanteric loading pads to create a well.
- All cushions not to be glued at the back.
- The depth of the well for 14” (36cm) - 24” (61cm) should be 3cm, for 12”(30cm) should be 2,5cm and 10” (25cm) should be 2cm.
- The width of the well = 50% of the width of the cushion.
- Length of the well = the width of the well up to maximum 20cm.
- Sizes 14”-24”: Top layer - 5cm thick high-density foam following contour of base through full length of cushion; only the front half of the cushion to be glued.
- Size 10” (keep and check) -12”: Top layer - 3cm thick high-density foam following contour of base through full length of cushion; only the front half of the cushion to be glued.
- Type, size, and direction of cushion use printed on bottom of base.

Material:

Top layer:

For sizes: 25cm - 46cm

High-density foam 36/20; Hardness factor 18-21.6; Density range 32.1-40kg/m³

For sizes: 51cm-61cm

High density foam 50/30 Hardness factor: 249-291 and Density: 37.1- 41kg/m³

Base layer:

High density compressed (reconstituted flexible PU) foam 1300; Hardness factor-52-63; Density 130±10% kg/m³ (SANS 642 - 1976)

2.1.2 CONTOURED BASE - WEDGED, THICK PRESSURE CARE CUSHION

Size range:

- 61 cm wide; 43 cm long; 6 cm high at rear, 11 cm high in front
- 56 cm wide; 43 cm long; 6 cm high at rear, 11 cm high in front
- 51 cm wide; 43 cm long; 6 cm high at rear, 11 cm high in front
- 46 cm wide; 43 cm long; 6 cm high at rear, 11 cm high in front
- 41 cm wide; 43 cm long; 6 cm high at rear, 11 cm high in front
- 38 cm wide; 43 cm long; 6 cm high at rear, 11 cm high in front
- 36 cm wide; 43 cm long; 6 cm high at rear, 11 cm high in front
- 30 cm wide; 43 cm long; 6 cm high at rear, 11 cm high in front
- 30 cm wide; 30 cm long; 4 cm high at rear, 8.5 cm high in front
- 25 cm wide; 30 cm long; 4 cm high at rear, 7.5 cm high in front

✓ Variance allowed on overall measurement for cushions: +1 cm

Description:

- Wheelchair basic foam pressure relieving cushion. Bevelled contoured base to match sling seat of wheelchair.
- Must have trochanteric loading pads to create a well.
- The depth of the well for 14” (36cm) - 24” (61cm) should be 3cm, 12” (30cm) should be 2,5cm and 10’ (2cm) .
- The width of the well = 50% of the width of the cushion.
- Length of the well = the width of the well up to maximum 20cm.
- 2cm wedge in front of pre-ischial shelf extending to the front of the cushion.
- Sizes 14”-24”: Top layer - 5cm thick high-density foam following contour of base through full length of cushion; only the front half of the cushion to be glued.
- Size 10” -12”: Top - 3 cm thick high-density foam following contour of base through full length of cushion; only the front half of the cushion to be glued.
- Type, size, and direction of cushion use printed on bottom of base.

Material:

Top layer:

For sizes: 25cm – 46 cm
High-density foam 36/20; Hardness factor 18 – 21.6; Density range 32.1-40kg/m³

For sizes: 51cm -61cm
High density foam 50/30 Hardness factor: 249 - 291 and Density: 37.1- 41kg/m³

Base layer:

High density compressed (reconstituted flexible PU) foam 1300; Hardness factor 52-63; Density 130±10% kg/m³ (SANS 642 - 1976)

2.1.3 CONTOURED BASE – BASIC THIN FOAM, POSITIONER CUSHION

Size range:

- 51 cm wide; 43 cm long; 7 cm high
- 46 cm wide; 43 cm long; 7 cm high
- 43 cm wide; 43 cm long; 7 cm high
- 41 cm wide; 43 cm long; 7 cm high
- 38 cm wide; 43 cm long; 7 cm high
- 36 cm wide; 43 cm long; 7 cm high
- 30 cm wide; 43 cm long; 6.5 cm high
- 30 cm wide; 33 cm long; 6.5 cm high
- 25 cm wide; 28 cm long; 6 cm high

✓ Variance allowed on overall measurement for cushions: +1cm

Description:

- Bevelled contoured base to match sling seat of wheelchair. Sitting surface with pre-ischial shelf.
- The depth of the pre-ischial shelf for 14" (36cm) - 20 (51cm) should be 3cm minimum, for 12" (30cm) should be 2,5cm minimum, and for 10" (25cm) should be 2cm minimum.
- The distance of the shelf from the rear of the cushion = 50% of the width of the cushion up to maximum of 20cm.
- Top: 3cm thick high-density foam following contour of base through full length of cushion; only the front half of the cushion to be glued.
- Type, size, and direction of cushion use printed on bottom of base.

Material:

Top layer:

For sizes: 25cm - 48cm

High-density foam 36/20; Hardness factor 18 – 21.6; Density range 32.1-40kg/m³

For sizes: 51cm

High density foam 50/30 Hardness factor: 249 - 291 and Density: 37.1- 41kg/m³

Base layer:

High density compressed (reconstituted flexible PU) foam 1300; Hardness factor 52-63; Density 130±10% kg/m³ (SANS 642 - 1976)

2.1.4 CONTOURED BASE - WEDGED, THIN FOAM POSITIONER

Size range:

- 51 cm wide; 43 cm long; 4 cm high at rear, 9 cm high in front
- 46 cm wide; 43 cm long; 4 cm high at rear, 9 cm high in front
- 43 cm wide; 43 cm long; 4 cm high at rear, 9 cm high in front
- 41 cm wide; 43 cm long; 4 cm high at rear, 9 cm high in front
- 38 cm wide; 43 cm long; 4 cm high at rear, 9 cm high in front
- 36 cm wide; 43 cm long; 4 cm high at rear, 9 cm high in front
- 30 cm wide; 43 cm long; 4 cm high at rear, 9 cm high in front
- 30 cm wide; 33 cm long; 4 cm high at rear, 8 cm high in front
- 25 cm wide; 28 cm long; 4 cm high at rear, 7.5cm high in front

✓ Variance allowed on overall measurement for cushions: width: +/-1cm
✓ Variance in front to be +-0.5cm

Description:

- Bevelled contoured base to match sling seat of wheelchair. Sitting surface with pre-ischial shelf.
- The depth of the pre-ischial shelf for 14” (36cm) - 20” (51cm) should be 3cm minimum, 12” (30cm) should be 2,5cm minimum, and 10” (25cm) should be 2cm minimum.
- The distance of the shelf from the rear = 50% of the width of the cushion up to maximum of 20cm.
- 2cm wedge in front of pre-ischial shelf extending to the front of the cushion.
- Top: 3cm thick high-density foam following contour of base through full length of cushion; only the front half of the cushion to be glued.
- Type, size, and direction of cushion use printed on bottom of base.

Material:

Top layer:

For sizes: 25cm-46cm
High-density foam 36/20; Hardness factor 18 – 21.6; Density range 32.1-40kg/m³

For sizes: 51cm
High density foam 50/30 Hardness factor: 249 - 291 and Density: 37.1- 41kg/m³

Base layer:

High density compressed (reconstituted flexible PU) foam 1300; Hardness factor 52-63; Density 130±10% kg/m³ (SANS 642 - 1976)

2.1.5 CONTOURED BASE - THICK PRESSURE CARE FOAM CUSHION, EXTENDED LENGTH

✓ Variance allowed on overall measurement for cushion: +1 cm

Size range:

- 61 cm wide; 50 cm long; 9 cm high
- 56 cm wide; 50 cm long; 9 cm high
- 51 cm wide; 50 cm long; 9 cm high
- 46 cm wide; 50 cm long; 9 cm high
- 43 cm wide; 50 cm long; 9 cm high
- 41 cm wide; 50 cm long; 9 cm high
- 38 cm wide; 50 cm long; 9 cm high
- 36 cm wide; 50 cm long; 8.5 cm high
- 30 cm wide; 50 cm long; 8.5 cm high

Description:

- Wheelchair basic foam pressure relieving cushion. Bevelled contoured base to match sling seat of wheelchair.
- Must have trochanteric loading pads to create a well.
- The depth of the well for 14” (36cm) - 24” (61cm) should be 3cm, for 12” (30cm) should be 2,5cm.
- The width of the well = 50% of the width of the cushion.
- Length of the well = the width of the well up to maximum 20cm.
- Size 14”-24”, 5cm thick high-density foam top layer following contour of base through full length of cushion; only the front half of the cushion to be glued.
- Size 12”, 3cm thick high-density foam top layer, following contour of base through full length of cushion; only the front half of the cushion to be glued.
- Type, size, and direction of cushion use printed on bottom of base.

Material:

Top layer:

For sizes: 30cm-46cm
High-density foam 36/20; Hardness factor 18 – 21.6; Density range 32.1-40kg/m³

For sizes: 51cm-61cm
High density foam 50/30 Hardness factor: 249 - 291 and Density: 37.1- 41kg/m³

Base layer:

High density compressed (reconstituted flexible PU) foam 1300; Hardness factor 52-63 Density 130+10% kg/m³ (SANS 642 - 1976)

2.1.6 CONTOURED BASE - WEDGED, THICK PRESSURE CARE FOAM CUSHION, EXTENDED LENGTH

Size range:

- 61 cm wide; 50 cm long; 6 cm high at rear, 11 cm high in front
- 56 cm wide; 50 cm long; 6 cm high at rear, 11 cm high in front
- 51 cm wide; 50 cm long; 6 cm high at rear, 11 cm high in front
- 46 cm wide; 50 cm long; 6 cm high at rear, 11 cm high in front
- 43 cm wide; 50 cm long; 6 cm high at rear, 11 cm high in front
- 41 cm wide; 50 cm long; 6 cm high at rear, 11 cm high in front
- 38 cm wide; 50 cm long; 6 cm high at rear, 11cm high in front
- 36 cm wide; 50 cm long; 6 cm high at rear, 11 cm high in front
- 30 cm wide; 50 cm long; 6 cm high at rear, 10.5 cm high in front

✓ Variance allowed on overall measurement for cushions: +1 cm

Description:

- Wheelchair basic foam pressure relieving cushion. Bevelled contoured base to match sling seat of wheelchair.
- Must have trochanteric loading pads to create a well.
- The depth of the well for 14” (36cm) - 24” (61cm) should be 3cm, 12” (30cm) should be 2,5cm.
- The width of the well = 50% of the width of the cushion.
- Length of the well = the width of the well up to maximum 20cm.
- Size 14”-24”, 5cm thick high-density foam top layer, following contour of base; only the front half of the cushion to be glued.
- Size 12”, 3cm, thick high density foam top layer, following contour of base through full length of cushion, only the front half of the cushion to be glued.
- Type, size, and direction of cushion use printed on bottom of base.

Material:

Top layer:

For sizes: 30cm-46cm
High-density foam 36/20; Hardness factor 18 – 21.6; Density range 32.1-40kg/m³

For sizes: 51cm-61cm
High density foam 50/30 Hardness factor: 249 - 291 and Density: 37.1- 41kg/m³

Base layer:

High density compressed (reconstituted flexible PU) foam 1300; Hardness factor 52-63 Density 130+10% kg/m³ (SANS 642 - 1976)

2.1.7 CONTOURED BASE - THIN, BASIC POSITIONER FOAM CUSHION, EXTENDED LENGTH

Size range:

- 51 cm wide; 50 cm long; 7 cm high in front
- 46 cm wide; 50 cm long; 7 cm high in front
- 43 cm wide; 50 cm long; 7 cm high in front
- 41 cm wide; 50 cm long; 7 cm high in front
- 38 cm wide; 50 cm long; 7 cm high in front
- 36 cm wide; 50 cm long; 7 cm high in front
- 30 cm wide; 50 cm long; 7 cm high in front

✓ Variance allowed on overall measurement for cushions: +1 cm

Description:

- Bevelled contoured base to match sling seat of wheelchair. Sitting surface with pre-ischial shelf.
- The depth of the pre-ischial shelf for 14" (36cm) - 20" (51cm) should be 3cm minimum; 12" (30cm) should be 2, 5cm minimum.
- The distance of the shelf from the rear of the cushion = 50% of the width of the cushion up to maximum of 20cm.
- Top: 3cm thick high-density foam following contour of base through full length of cushion; only the front half of the cushion to be glued.
- Type, size, and direction of cushion use printed on bottom of base.

Material:

Top layer:

For Sizes: 30cm -46cm

High-density foam 36/20; Hardness factor 18 – 21.6; Density range 32.1-40kg/m³

For sizes: 51cm

High density foam 50/30 Hardness factor: 249 - 291 and Density: 37.1- 41kg/m³

Base layer:

High density compressed (reconstituted flexible PU) foam 1300; Hardness factor 52-63; Density 130+10% kg/m³ (SANS 642 - 1976)

2.1.8 CONTOURED BASE - WEDGED, THIN FOAM, POSITIONER, EXTENDED LENGTH

Size range:

- 51 cm wide; 50 cm long; 4 cm high at rear, 9 cm in front
- 46 cm wide; 50 cm long; 4 cm high at rear, 9 cm in front
- 43 cm wide; 50 cm long; 4 cm high at rear, 9 cm in front
- 41 cm wide; 50 cm long; 4 cm high at rear, 9 cm in front
- 38 cm wide; 50 cm long; 4 cm high at rear, 9 cm in front
- 36 cm wide; 50 cm long; 4 cm high at rear, 9 cm in front
- 30 cm wide; 50 cm long; 4 cm high at rear, 8.5 cm in front

✓ Variance allowed on overall measurement for cushions: +1 cm

Description:

- Bevelled contoured base to match sling seat of wheelchair. Sitting surface with pre-ischial shelf.
- The depth of the pre-ischial shelf for 14" (36cm) - 20" (51cm) should be 3cm minimum, 12" (30cm) should be 2, 5 cm minimum.
- The distance of the shelf from the rear of the cushion = 50% of the width of the cushion up to maximum of 20cm.
- 2cm wedge in front of pre-ischial shelf extending to the front of the cushion.
- Top: 3cm thick high-density foam following contour of base through full length of cushion; only the front half of the cushion to be glued.
- Type, size, and direction of cushion use printed on bottom of base

Material:

Top layer:

For sizes: 30cm -46cm

High-density foam 36/20; Hardness factor 18 – 21.6; Density range 32.1-40kg/m³

For sizes: 51cm

High density foam 50/30 Hardness factor: 249 - 291 and Density: 37.1- 41kg/m³

Base layer:

High density compressed (reconstituted flexible PU) foam 1300; Hardness factor 52-63; Density 130+10% kg/m³ (SANS 642 - 1976)

2.1.9 NON-CONTOURED BASE - STRAIGHT BASE, BASIC FOAM, THICK PRESSURE CARE CUSHION WITH NO ABDUCTION BLOCK

Size Range:

- 20 cm wide, 25 cm long, 9cm high
- 22.5 cm wide, 25 cm long, 9cm high
- 25 cm wide, 35 cm long, 9cm high
- 27.5 cm wide, 40 cm long, 9cm high
- 30 cm wide, 35 cm long, 9cm high
- 30 cm wide, 40 cm long, , 9cm high
- 36 cm wide, 40 cm long, , 9cm high
- 36 cm wide , 50 cm long, 9cm high
- 38cm wide, 50cm long, 9cm high
- 40 cm wide, 50 cm long, 9cm high
- 43 cm wide, 50 cm long, 9cm high
- 45 cm wide, 50 cm long, 9cm high
- 51 cm wide, 50 cm long, 9cm high

✓ Variance allowed on overall measurement for cushions: width: +1 cm

Description:

- Wheelchair basic foam pressure relieving cushion. Flat base to match solid wheelchair seat.
- Must have trochanteric loading pads to create a well.
- The depth of the well for 14" (36cm) - 20"(51cm) should be 3cm, for 8" (20cm) - 12"(30cm) should be 2,5cm.
- The width of the well = 50% of the width of the cushion
- The length of the well = the width of the well up to maximum 20cm.
- Base layer: Minimum thickness 4 cm for sizes 14"-20" and minimum thickness 3cm for 12" and minimum 2,5cm for 10" and smaller.
- The thickness of the top layer for 14" (36cm) -20" (51cm) should be 5cm minimum and for 8" (20cm) -12" (30cm) should be 3cm; only the front half of the cushion to be glued.
- Type, size, and direction of cushion use printed on bottom of base.

Material:

Top layer:

For sizes to fit: 8"-18"

High-density foam 36/20; Hardness factor 18 – 21.6; Density range 32.1-40kg/m³

For sizes: 20"

High density foam 50/30 Hardness factor: 249 - 291 and Density: 37.1- 41kg/m³

Base layer:

High density compressed (reconstituted flexible PU) foam 1300 Hardness factor 52-63; Density 130±10% kg/m³ (SANS 642 - 1976)

2.1.10 NON-CONTOURED BASE - STRAIGHT BASE, THICK PRESSURE CARE WITH ABDUCTION BLOCK

Size Range:

- 20 cm wide, 25 cm long, 9cm high with extra-small abduction block
- 22.5 cm wide, 25 cm long, 9cm high with extra-small abduction block
- 25 cm wide, 35 cm long, 9cm high with extra-small abduction block
- 27.5 cm wide, 40 cm long, 9cm high with extra-small abduction block
- 30 cm wide, 35 cm long, 9cm high, with small abduction block
- 30 cm wide, 40 cm long, 9cm high, with small abduction block
- 35 cm wide, 40 cm long, 9cm high, with small abduction block
- 36 cm wide, 50 cm long, 9cm high, with small abduction block
- 38cm wide, 50cm long, 9cm high, with small abduction block
- 41 cm wide, 50 cm long, 9cm high with large abduction block
- 43 cm wide, 50 cm long, 9cm high with large abduction block
- 46 cm wide, 50 cm long, 9cm high with large abduction block
- 51 cm wide, 50 cm long, 9cm high with large abduction block

✓ Variance allowed on overall measurement for cushions: width: +1 cm

Description:

- Wheelchair basic foam pressure relieving cushion. Flat base to match solid wheelchair seat.
- Must have trochanteric loading pads to create a well.
- The depth of the well for 14” (36cm) - 20”(51cm) should be 3cm, for 8” (20cm) - 12”(30cm) should be 2,5cm.
- The width of the well = 50% of the width of the cushion
- The length of the well = the width of the well up to maximum 20cm.
- Base layer: Minimum thickness 4 cm for sizes 14”-20” and minimum thickness 3cm for 12” and minimum 2,5cm for 10” and smaller.
- The thickness of the top layer for 14” (36cm) -20” (51cm) should be 5cm minimum and for 8” (20cm) -12” (30cm) should be 3cm; only the front half of the cushion to be glued.
- The pommel should extend beyond the end of the cushion to reach the front of the user’s knees.
- The height of the pommel = the full thickness of the cushion from the base and includes average height of user’s thigh in the front.
- The length of the pommel should not be more than the distal third of the femur.
- Type, size, and direction of cushion use printed on bottom of base.

Material:

Top layer:

For sizes to fit: 8”-18”

High-density foam 36/20; Hardness factor 18 – 21.6; Density range 32.1-40kg/m³

For sizes: 20”

High density foam 50/30 Hardness factor: 249 - 291 and Density: 37.1- 41kg/m³

Base layer:

High density compressed (reconstituted flexible PU) foam 1300 Hardness factor 52-63; Density 130±10% kg/m³ (SANS 642 - 1976)

2.1.11 NON-CONTOURED BASE - STRAIGHT BASE, THIN FOAM POSITIONER WITH NO ABDUCTION BLOCK

Size Range:

- 20 cm wide, 25 cm long, 7cm high
- 22.5 cm wide, 25 cm long, 7cm high
- 25 cm wide, 35 cm long, 7cm high
- 27.5 cm wide, 40 cm long, 7cm high
- 30 cm wide, 35 cm long, 7cm high
- 30 cm wide, 40 cm long, 7cm high
- 36 cm wide, 40 cm long, 7cm high
- 36 cm wide, 50 cm long, 7cm high
- 38cm wide, 50cm long, 7 cm high
- 40 cm wide, 50 cm long, 7cm high
- 43 cm wide, 50 cm long, 7cm high
- 45 cm wide, 50 cm long, 7cm high
- 51 cm wide, 50 cm long, 7cm high

✓ Variance allowed on overall measurement for cushions: width: +1 cm

Description:

- Wheelchair basic foam positioner cushion. Flat base to match solid wheelchair seat
- Sitting surface with pre-ischial shelf.
- The depth of the pre-ischial shelf for 14” (36cm) - 20” (51cm) should be 3cm minimum, 12” (30cm) should be 2,5 cm minimum.
- The distance of the shelf from the rear of the cushion = 50% of the width of the cushion up to maximum of 20cm.
- Base layer: Minimum thickness 4cm for sizes 14”-20” and minimum thickness 3cm for 12” and minimum 2,5cm for 10” and smaller.
- The thickness of the top layer for 14” (36cm) -20” (51cm) should be 3cm minimum and for 8” (20cm) -12” (30cm) should be 2.5cm.; only the front half of the cushion to be glued.
- Type, size, and direction of cushion use printed on bottom of base.

Material:

Top layer:

For sizes to fit: 8”-18”

High-density foam 36/20; Hardness factor 18 – 21.6; Density range 32.1-40kg/m³

For sizes: 20”

High density foam 50/30 Hardness factor: 249 - 291 and Density: 37.1- 41kg/m³

Base layer:

High density compressed (reconstituted flexible PU) foam 1300 Hardness factor 52-63: Density 130±10% kg/m³ (SANS 642 - 1976)

2.1.12 NON-CONTOURED BASE - STRAIGHT BASE, THIN FOAM POSITIONER WITH ABDUCTION BLOCK

Size Range:

- 20 cm wide, 25 cm long, 7cm high with extra-small abduction block
- 22.5 cm wide, 25 cm long, 7cm high with extra-small abduction block
- 25 cm wide, 35 cm long, 7cm high with extra-small abduction block
- 27.5 cm wide, 40 cm long, 7cm high with extra-small abduction block
- 30 cm wide, 35 cm long, 7cm high with small abduction block
- 30 cm wide, 40 cm long, 7cm high with small abduction block
- 35 cm wide, 40 cm long, 7cm high with small abduction block
- 36 cm wide, 50 cm long, 7cm high with small abduction block
- 41 cm wide, 50 cm long, 7cm high with large abduction block
- 43 cm wide, 50 cm long, 7cm high with large abduction block
- 46 cm wide, 50 cm long, 7cm high with large abduction block
- 51 cm wide, 50 cm long, 7cm high with large abduction block

✓ Variance allowed on overall measurement for cushions: width: +1 cm

Description:

- Wheelchair basic foam positioner cushion. Flat base to match solid wheelchair seat
- Sitting surface with pre-ischial shelf.
- The depth of the well for 14” (36cm) - 20”(51cm) should be 30mm, for 12”(30cm) should be 2,5cm.
- The distance of the shelf from the rear of the cushion = 50% of the width of the cushion up to maximum of 20cm.
- Base layer: Minimum thickness 4cm for sizes 14”-20” and minimum thickness 3cm for 12” and minimum 2,5cm for 10” and smaller.
- The thickness of the top layer for 14” (36cm) -20” (51cm) should be 3cm minimum and for 8” (20cm) -12” (30cm) should be 2.5cm.; only the front half of the cushion to be glued.
- The pommel should extend beyond the end of the cushion to reach the front of the user’s knees.
- The height of the pommel = the full thickness of the cushion from the base and includes average height of user’s thigh in the front.
- The length of the pommel should not be more than the distal third of the femur.
- Type, size, and direction of cushion use printed on bottom of base.

Material:

Top layer:

For sizes to fit: 8”-18”

High-density foam 36/20; Hardness factor 18 – 21.6; Density range 32.1-40kg/m³

For sizes: 20”

High density foam 50/30 Hardness factor: 249 - 291 and Density: 37.1- 41kg/m³

Base layer:

High density compressed (reconstituted flexible PU) foam 1300 Hardness factor 52-63: Density 130±10% kg/m³ (SANS 642 - 1976)

2.2 FLUID FILLED CUSHION

2.2.1 FLUID FILLED CUSHIONS WITH CONTOURED BASE AND REAR FLUID PAD

Size range:

- 51 cm wide, 45cm long, no thicker than 8 cm
- 46 cm wide, 43 cm long, no thicker than 8 cm
- 46 cm wide, 45 cm long, no thicker than 8 cm
- 43 cm) wide, 45 cm long, no thicker than 8 cm
- 43 cm wide, 43 cm long, no thicker than 8 cm
- 41 cm wide, 45 cm long, no thicker than 8 cm
- 41 cm wide, 43 cm long, no thicker than 8 cm
- 38 cm wide, 43 cm long, no thicker than 8 cm
- 36 cm wide, 45 cm long, no thicker than 8 cm
- 36 cm wide, 41 cm long, no thicker than 8 cm

✓ Variance allowed on overall measurement for cushions: width: -1cm (minus 1cm); length: ±1cm; thickness: ±0.5cm.

Description:

- Wheelchair contoured fluid filled medium to high-risk pressure relieving cushion.
- Type, size, and direction of cushion use printed on base of cushion.

Base layer:

- Bottom of base flat. To be supplied with solid seat insert or sling filler for use on sling seats.
- Sitting surface of base to be contoured with ischial well and trochanteric loading pads. Ischial well to be at least 4 + 1cm high and front edge straight or slightly curved. Fluid pad in ischial well. Flat area under thighs with central raise between thighs of 1.25cm-2.5cm high.
- Removable side inserts to position legs. These may integrate with the base cover or be applied directly to the base.

Fluid pad:

- Viscous fluid. Able to move away from pressure and mould to pressure area.
- Viscous fluid of a non-evaporating, non-toxic nature. Fluid may not contain any irritants. Viscosity like petroleum jelly. Fluid should not be able to be compressed and volume may not change with temperature. Viscosity may not change properties under repeated sheer. Must remain fluid even in temperatures to 0 degrees.
- Temperature range at which it still works (viscosity/nature of the gel will change in extreme temperatures.
- Fluid pad minimum 3 sections, one each for left and right ischial tuberosities and one under the coccyx.
- Adequate volume to completely fill ischial well when fitted correctly.
- Removable. Secure attachment by means of minimum 5 hook and loop strips.
- Design and attachment to minimise risk to bottom out by allowing for adequate volume of pad, volume of fluid, viscosity of fluid and attachment parameters.

- Fluid pad at least 25% wider than underlying base when pad is laid down flat.

Covers:

- Separate removable base cover.
- Separate removable base cover waterproof.
- Separate removable external cover. External cover to allow moulding with fluid pad without interfering with pressure relieving properties.
- External cover machine washable.

Weight of cushion:

- Maximum weight 5kg

User weight capacity:

- To accommodate users weighing up to 150kg

Guarantee:

- Minimum 2-year guarantee against defective manufacturing.

2.3 AIR FILLED CUSHIONS

2.3.1 AIR FILLED CUSHIONS WITH FLEXIBLE BASE

Size range:

- 51 cm wide, 46 cm long, no higher than 10 cm
- 51 cm wide, 41 cm long, no higher than 10 cm
- 46 cm wide, 46 cm long, no higher than 10 cm
- 46 cm wide, 41 cm long, no higher than 10 cm
- 41 cm wide, 46 cm long, no higher than 10 cm
- 41 cm wide, 41 cm long, no higher than 10 cm
- 38 cm wide, 46 cm long, no higher than 10 cm
- 36 cm wide, 41 cm long, no higher than 10 cm

✓ Variance allowed on overall measurement for cushions: width: -1cm (minus 1cm); length: ±1cm; thickness: ±0.5cm.

Description:

- Air -filled high risk pressure relieving cushion.
- Air contained in multiple interlinked compartments, 10cm in height.
- Able to regulate the volume of air in compartments to prevent bottoming out.
- Dedicated dual purpose in- and outlet valve.
- Multiple compartments arranged in 4 functional units which can be sealed off from each other to allow for customising of air pressures in each of the 4 compartments.
- Dedicated air lock to control flow between the 4 compartments.

Base layer:

- Thin rubber, flexible, base integrated with air-filled interface layer.

Accessories:

- Dedicated pump
- Repair kit
- Cover

Weight of cushion:

- Up to 1,7 kg

Guarantee:

Minimum 2-year guarantee against defective manufacturing.

2.3.2 CUSHIONS WITH INDIVIDUAL REMOVABLE AIR-FILLED POCKETS/CELLS

Size range:

- 51 cm wide, 51 cm long, no higher than 10 cm
- 51 cm wide, 46 cm long, no higher than 10 cm
- 46 cm wide, 51 cm long, no higher than 10 cm
- 46 cm wide, 46 cm long, no higher than 10 cm
- 46 cm wide, 41 cm long, no higher than 10 cm
- 43 cm wide, 43 cm long, no higher than 10 cm
- 41 cm wide, 46 cm long, no higher than 10 cm
- 41 cm wide, 41 cm long, no higher than 10 cm
- 36 cm wide, 41 cm long, no higher than 10 cm

✓ Variance allowed on overall measurement for cushions: width: -1cm (minus 1cm); length: ±1cm; thickness: ±0.5cm.

Description:

- Air -filled high risk pressure relieving cushion.
- Compartments/sectioned with clear ischial seat area and individual left /right sections. Minimum 6 pockets in total: Compartments filled with individual pre- filled airtight pockets/cells.

Cover:

- Separate stretchable, removable cover. Cover machine washable.
- Non-slip bottom of cover with hook and loop strips to attach cushion to wheelchair.
- Type, size, and direction of cushion use printed on cover.

Guarantee:

- Minimum 2-year guarantee against defective manufacturing

Accessories

- Covers and
- Individual air pockets

2.4 COMPRESSED FOAM WEDGE

✓ Variance allowed on overall measurement for wedge: width: -1cm (minus 1cm); length: ±1cm.

Range:

- 45 cm wide; 45 cm long; 1 cm high at rear, 3 cm high in front
- 45 cm wide; 45 cm long;1 cm high at rear, 5 cm high in front

Description:

- Compressed foam wedge to be used to customise wheelchair cushions (non-contoured base).

Material:

- High density compressed (reconstituted flexible PU) foam 1300; Hardness factor – 52-63; Density 130+10% kg/m³ (SANS 642 - 1976).

2.5 COMPRESSED FOAM SHEET

✓ Variance allowed on overall measurement for foam sheets: width: -1cm (minus 1cm); length: ±1cm.

Range:

- 122 cm x 180 cm x 5 cm
- 122 cm x 180 cm x 3 cm
- 122 cm x 180 cm x 2 cm
- 120 cm x 180 cm x 1.2 cm
- 137 cm x 94 cm x 5cm
- 137 cm x 94 cm x 3cm
- 137 cm x 94 cm x 2 cm
- 137 cmx 94 cm x 1.2 cm

Description:

- Compressed foam sheet

Material:

- High density compressed (reconstituted flexible PU) foam 1300; Hardness factor 52-63; Density 130+10% kg/m³ (SABS 642 - 1976)

Optional:

- No cost option to order 1 full sheet or 1 sheet cut into two at 68,5cm x 94cm x thickness

2.6 HIGH DENSITY FOAM SHEET

✓ Variance allowed on overall measurement for foam sheets: width: -1cm (minus 1cm); length: ±1cm.

Range:

- 188 cm x 183 cm x 1.2 cm
- 188 cm x 183 cm x 3 cm
- 188 cm x 183 cm x 5 cm
- 188 cm x 183 cm x 10 cm
- 188 cm x 183 cm x 15 cm
- 190 cm x 115 cm x 1.2 cm
- 190 cm x 115 cm x 3 cm
- 190 cm x 115 cm x 5 cm
- 190 cm x 115 cm x 10 cm
- 190 cm x 115 cm x 15 cm

Description:

- High density foam sheet

Material:

- High-density foam 36/20; Hardness factor 18 – 21.6; Density range 32.1-40kg/m³

Optional:

- No cost option to order 1 full sheet or 1 sheet cut into two at 68,5cm x 94cm x thickness

END OF CATEGORY 2

3. CATEGORY 3 : WHEELCHAIR CUSHION COVERS

3.1 WHEELCHAIR CUSHION COVERS FOR CONTOURED BASED, BASIC FOAM

3.1.1 NYLON WHEELCHAIR CUSHION COVER TO FIT THICK PRESSURE CARE CUSHION WITH CONTOURED BASE

Size range:

- 61 cm wide; 43 cm long; 9 cm high front
- 56 cm wide; 43 cm long; 9 cm high front
- 51 cm wide; 43 cm long; 9 cm high front
- 43 cm wide; 43 cm long; 9 cm high front
- 46 cm wide; 43 cm long; 9 cm high front
- 41 cm wide; 43 cm long; 9 cm high front
- 38 cm wide; 43 cm long; 9 cm high front
- 36 cm wide; 43 cm long; 9 cm high front
- 30 cm wide; 43 cm long; 9 cm high front
- 30 cm wide; 30 cm long; 6.5 cm high front
- 25 cm wide; 30 cm long; 6 cm high front

✓ Variance allowed on overall measurement for cushions: +1cm.

Description of cushion cover:

- Heavy duty nylon (300g/m²), colour fast.
- 2 ways stretch.
- Breathable and machine washable.
- Pull over elastic band with size label.
- Colour: Preferably Black, alternately Navy Blue

3.1.2 WATERPROOF WHEELCHAIR COVER TO FIT THICK PRESSURE CARE CUSHION WITH CONTOURED BASE

Size range:

- 61 cm wide; 43 cm long; 9 cm high front
- 56 cm wide; 43 cm long; 9 cm high front
- 51 cm wide; 43 cm long; 9 cm high front
- 43 cm wide; 43 cm long; 9 cm high front
- 46 cm wide; 43 cm long; 9 cm high front
- 41 cm wide; 43 cm long; 9 cm high front
- 38 cm wide; 43 cm long; 9 cm high front
- 36 cm wide; 43 cm long; 9 cm high front
- 30 cm wide; 43 cm long; 9 cm high front
- 30 cm wide; 30 cm long; 6.5 cm high front
- 25 cm wide; 30 cm long; 6 cm high front

✓ Variance allowed on overall measurement for cushions: +1cm.

Description of cushion cover:

- Fabric, waterproof, terry cloth covered.
- 2 ways stretch, breathable, anti-microbial shield treatment.
- Machine washable.
- Colour: Preferably Black, alternately Navy Blue
- Pull over elastic band with size label.

3.1.3 NYLON WHEELCHAIR COVER TO FIT WEDGED, THICK PRESSURE CARE CUSHION WITH CONTOURED BASE

Size range:

- 61 cm wide; 43 cm long; 6 cm high at rear, 11 cm in front
- 56 cm wide; 43 cm long; 6 cm high at rear, 11 cm in front
- 51 cm wide; 43 cm long; 6 cm high at rear, 11 cm in front
- 43 cm wide; 43 cm long; 6 cm high at rear, 11 cm in front
- 46 cm wide; 43 cm long; 6 cm high at rear, 11 cm in front
- 41 cm wide; 43 cm long; 6 cm high at rear, 11 cm in front
- 38 cm wide; 43 cm long; 6 cm high at rear, 11 cm in front
- 36 cm wide; 43 cm long; 6 cm high at rear, 11 cm in front
- 30 cm wide; 43 cm long; 6 cm high at rear, 11 cm in front
- 30 cm wide; 30 cm long; 4 cm high at rear, 8.5 cm in front
- 25 cm wide; 30 cm long; 4 cm high at rear, 7.5 cm in front

✓ Variance allowed on overall measurement for cushions: +1 cm.

Description of cushion cover:

- Heavy duty nylon (300g/m²), colour fast.
- 2-way stretch.
- Breathable and machine washable.
- Pull over elastic band with size label.
- Colour: Preferably Black, alternately Navy Blue

3.1.4 WATERPROOF WHEELCHAIR COVER TO FIT WEDGED, THICK PRESSURE CARE CUSHION WITH CONTOURED BASE

Size range:

- 61 cm wide; 43 cm long; 6 cm high at rear, 11 cm in front
- 56 cm wide; 43 cm long; 6 cm high at rear, 11 cm in front
- 51 cm wide; 43 cm long; 6 cm high at rear, 11 cm in front
- 43 cm wide; 43 cm long; 6 cm high at rear, 11 cm in front
- 46 cm wide; 43 cm long; 6 cm high at rear, 11 cm in front
- 41 cm wide; 43 cm long; 6 cm high at rear, 11 cm in front
- 38 cm wide; 43 cm long; 6 cm high at rear, 11 cm in front
- 36 cm wide; 43 cm long; 6 cm high at rear, 11 cm in front
- 30 cm wide; 43 cm long; 6 cm high at rear, 11 cm in front
- 30 cm wide; 30 cm long; 4 cm high at rear, 8.5 cm in front
- 25 cm wide; 30 cm long; 4 cm high at rear, 7.5 cm in front

✓ Variance allowed on overall measurement for cushions: +1 cm.

Description of cushion cover:

- Fabric, waterproof, terry cloth covered.
- 2 ways stretch, breathable, anti-microbial shield treatment.
- Machine washable.
- Pull over elastic band with size label.
- Colour: Preferably Black, alternately Navy Blue.

3.1.5 NYLON COVER TO FIT THIN FOAM POSITIONER CUSHION WITH CONTOURED BASE

Size range:

- 51 cm wide; 43 cm long; 7 cm high
- 46 cm wide; 43 cm long; 7 cm high
- 43 cm wide; 43 cm long; 7 cm high
- 41 cm wide; 43 cm long; 7 cm high
- 38 cm wide; 43 cm long; 7 cm high
- 36 cm wide; 43 cm long; 7 cm high
- 30 cm wide; 43 cm long; 6.5 cm high
- 30 cm wide; 33 cm long; 6.5 cm high
- 25 cm wide; 28 cm long; 6 cm high

✓ Variance allowed on overall measurement for cushions: +1cm.

Description of cushion cover:

- Heavy duty nylon (300g/m²), colour fast.
- 2 ways stretch.
- Breathable and machine washable.
- Pull over elastic band with size label.
- Colour: Preferably Black, alternately Navy Blue.

3.1.6 WATERPROOF WHEELCHAIR COVER TO FIT THIN FOAM POSITIONER CUSHION WITH CONTOURED BASE

Size range:

- 51 cm wide; 43 cm long; 7 cm high
- 46 cm wide; 43 cm long; 7 cm high
- 43 cm wide; 43 cm long; 7 cm high
- 41 cm wide; 43 cm long; 7 cm high
- 38 cm wide; 43 cm long; 7 cm high
- 36 cm wide; 43 cm long; 7 cm high
- 30 cm wide; 43 cm long; 6.5 cm high
- 30 cm wide; 33 cm long; 6.5 cm high
- 25 cm wide; 28 cm long; 6 cm high

✓ Variance allowed on overall measurement for cushions: +1cm

Description of cushion cover:

- Fabric, waterproof, terry cloth covered.
- 2 ways stretch, breathable, anti-microbial shield treatment.
- Machine washable.
- Colour: Preferably Black, alternately Navy Blue.

3.1.7 NYLON WHEELCHAIR CUSHION COVER TO FIT WEDGED, THIN FOAM POSITIONER WITH CONTOURED BASE

Size range:

- 51 cm wide; 43 cm long; 4 cm high at rear, 9 cm in front
- 46 cm wide; 43 cm long; 4 cm high at rear, 9 cm in front
- 43 cm wide; 43 cm long; 4 cm high at rear, 9 cm in front
- 41 cm wide; 43 cm long; 4 cm high at rear, 9 cm in front
- 38 cm wide; 43 cm long; 4 cm high at rear, 9 cm in front
- 36 cm wide; 43 cm long; 4 cm high at rear, 9 cm in front
- 30 cm wide; 43 cm long; 4 cm high at rear, 9 cm in front
- 30 cm wide; 33 cm long; 4 cm high at rear, 8.5 cm in front
- 25 cm wide; 28 cm long; 4 cm high at rear, 7.5cm in front

✓ Variance allowed on overall measurement for cushions: width: +1cm.

Description of cushion cover:

- Heavy duty nylon (300g/m²), colour fast.
- 2 ways stretch.
- Breathable and machine washable.
- Pull over elastic band with size label.
- Colour: Preferably Black, alternately Navy Blue.

3.1.8 WATERPROOF WHEELCHAIR CUSHION COVER TO FIT WEDGED, THIN FOAM POSITIONER WITH CONTOURED BASE

Size range:

- 51 cm wide; 43 cm long; 4 cm high at rear, 9 cm in front
- 46 cm wide; 43 cm long; 4 cm high at rear, 9 cm in front
- 43 cm wide; 43 cm long; 4 cm high at rear, 9 cm in front
- 41 cm wide; 43 cm long; 4 cm high at rear, 9 cm in front
- 38 cm wide; 43 cm long; 4 cm high at rear, 9 cm in front
- 36 cm wide; 43 cm long; 4 cm high at rear, 9 cm in front
- 30 cm wide; 43 cm long; 4 cm high at rear, 9 cm in front
- 30 cm wide; 33 cm long; 4 cm high at rear, 8.5 cm in front
- 25 cm wide; 28 cm long; 4 cm high at rear, 7.5cm in front

✓ Variance allowed on overall measurement for cushions: width: +1cm.

Description of cushion cover:

- Fabric, waterproof, terry cloth covered.
- 2 ways stretch, breathable, anti-microbial shield treatment.
- Machine washable.
- Colour: Preferably Black, alternately Navy Blue.

3.2 WHEELCHAIR CUSHION COVERS FOR CONTOURED BASED, BASIC FOAM EXTENDED LENGTH

3.2.1 NYLON WHEELCHAIR CUSHION COVER TO FIT THICK PRESSURE CARE FOAM CUSHION WITH CONTOURED BASE, EXTENDED LENGTH

Size range:

- 61 cm wide; 50 cm long; 9 cm high
- 56 cm wide; 50 cm long; 9 cm high
- 51 cm wide; 50 cm long; 9 cm high
- 46 cm wide; 50 cm long; 9 cm high
- 43 cm wide; 50 cm long; 9 cm high
- 41 cm wide; 50 cm long; 9 cm high
- 38 cm wide; 50 cm long; 9 cm high
- 36 cm wide; 50 cm long; 9 cm high
- 30 cm wide; 50 cm long; 6.5 cm high

✓ Variance allowed on overall measurement for cushion: +1 cm.

Description of cushion cover:

- Heavy duty nylon (300g/m²), colour fast.
- 2 ways stretch.
- Breathable and machine washable.
- Pull over elastic band with size label.
- Colour: Preferably Black, alternately Navy Blue.

3.2.2 WATERPROOF WHEELCHAIR CUSHION COVER TO FIT THICK PRESSURE CARE FOAM CUSHION WITH CONTOURED BASE, EXTENDED LENGTH

Size range:

- 61 cm wide; 50 cm long; 9 cm high
- 56 cm wide; 50 cm long; 9 cm high
- 51 cm wide; 50 cm long; 9 cm high
- 46 cm wide; 50 cm long; 9 cm high
- 43 cm wide; 50 cm long; 9 cm high
- 41 cm wide; 50 cm long; 9 cm high
- 38 cm wide; 50 cm long; 9 cm high
- 36 cm wide; 50 cm long; 9 cm high
- 30 cm wide; 50 cm long; 6.5 cm high

✓ Variance allowed on overall measurement for cushion: +1 cm.

Description of cushion cover:

- Fabric, waterproof, terry cloth covered.
- 2 ways stretch, breathable, anti-microbial shield treatment.
- Machine washable.
- Colour: Preferably Black, alternately Navy Blue.

3.2.3 NYLON WHEELCHAIRS CUSHION COVER TO FIT WEDGED, THICK PRESSURE CARE FOAM CUSHION WITH CONTOURED BASE, EXTENDED LENGTH

Size range:

- 61 cm wide; 50 cm long; 6 cm high at rear, 11 cm in front
- 56 cm wide; 50 cm long; 6 cm high at rear, 11 cm in front
- 51 cm wide; 50 cm long; 6 cm high at rear, 11 cm in front
- 46 cm wide; 50 cm long; 6 cm high at rear, 11 cm in front
- 43 cm wide; 50 cm long; 6 cm high at rear, 11 cm in front
- 41 cm wide; 50 cm long; 6 cm high at rear, 11 cm in front
- 38 cm wide; 50 cm long; 6 cm high at rear, 11cm in front
- 36 cm wide; 50 cm long; 6 cm high at rear, 11 cm in front
- 30 cm wide; 50 cm long; 4 cm high at rear, 8.5 cm in front

✓ Variance allowed on overall measurement for cushions:+1 cm.

Description of cushion cover:

- Heavy duty nylon (300g/m²), colour fast.
- 2 ways stretch.
- Breathable and machine washable.
- Pull over elastic band with size label.
- Colour: Preferably Black, alternately Navy Blue.

3.2.4 WATERPROOF WHEELCHAIR CUSHION COVER TO FIT WEDGED, THICK PRESSURE CARE FOAM CUSHION WITH CONTOURED BASE, EXTENDED LENGTH

Size range:

- 61 cm wide; 50 cm long; 6 cm high at rear, 11 cm in front
- 56 cm wide; 50 cm long; 6 cm high at rear, 11 cm in front
- 51 cm wide; 50 cm long; 6 cm high at rear, 11 cm in front
- 46 cm wide; 50 cm long; 6 cm high at rear, 11 cm in front
- 43 cm wide; 50 cm long; 6 cm high at rear, 11 cm in front
- 41 cm wide; 50 cm long; 6 cm high at rear, 11 cm in front
- 38 cm wide; 50 cm long; 6 cm high at rear, 11cm in front
- 36 cm wide; 50 cm long; 6 cm high at rear, 11 cm in front
- 30 cm wide; 50 cm long; 64 cm high at rear, 8.5 cm in front

✓ Variance allowed on overall measurement for cushions: +1 cm.

Description of cushion cover:

- Fabric, waterproof, terry cloth covered.
- 2 ways stretch, breathable, anti-microbial shield treatment.
- Machine washable.
- Colour: Preferably Black, alternately Navy Blue.

3.2.5 NYLON WHEELCHAIR CUSHION COVER TO FIT THIN FOAM, BASIC POSITIONER CUSHION WITH CONTOURED BASE, EXTENDED LENGTH

Size range:

- 51 cm wide; 50 cm long; 7 cm high in front
- 46 cm wide; 50 cm long; 7 cm high in front
- 43 cm wide; 50 cm long; 7 cm high in front
- 41 cm wide; 50 cm long; 7 cm high in front
- 38 cm wide; 50 cm long; 7 cm high in front
- 36 cm wide; 50 cm long; 7 cm high in front
- 30 cm wide; 50 cm long; 6.5 cm high in front

✓ Variance allowed on overall measurement for cushions: +1 cm

Description of cushion cover:

- Heavy duty nylon (300g/m²), colour fast.
- 2 ways stretch.
- Breathable and machine washable.
- Pull over elastic band with size label.
- Colour: Preferably Black, alternately Navy Blue.

3.2.6 WATERPROOF WHEELCHAIR CUSHION COVER TO FIT THIN FOAM, BASIC POSITIONER CUSHION WITH CONTOURED BASE, EXTENDED LENGTH

Size range:

- 51 cm wide; 50 cm long; 7 cm high in front
- 46 cm wide; 50 cm long; 7 cm high in front
- 43 cm wide; 50 cm long; 7 cm high in front
- 41 cm wide; 50 cm long; 7 cm high in front
- 38 cm wide; 50 cm long; 7 cm high in front
- 36 cm wide; 50 cm long; 7 cm high in front
- 30 cm wide; 50 cm long; 6.5 cm high in front

✓ Variance allowed on overall measurement for cushions: +1 cm.

Description of cushion cover:

- Fabric, waterproof, terry cloth covered.
- 2 ways stretch, breathable, anti-microbial shield treatment.
- Machine washable.
- Colour: Preferably Black, alternately Navy Blue.

3.2.7 NYLON WHEELCHAIR CUSHION COVER TO FIT WEDGED, THIN FOAM, POSITIONER WITH CONTOURED BASE, EXTENDED LENGTH

Size range:

- 51 cm wide; 50 cm long; 4 cm high at rear, 9 cm in front
- 46 cm wide; 50 cm long; 4 cm high at rear, 9 cm in front
- 43 cm wide; 50 cm long; 4 cm high at rear, 9 cm in front
- 41 cm wide; 50 cm long; 4 cm high at rear, 9 cm in front
- 38 cm wide; 50 cm long; 4 cm high at rear, 9 cm in front
- 36 cm wide; 50 cm long; 4 cm high at rear, 9 cm in front
- 30 cm wide; 50 cm long; 4 cm high at rear, 8.5 cm in front

✓ Variance allowed on overall measurement for cushions: +1 cm

Description of cushion cover:

- Heavy duty nylon (300g/m²), colour fast.
- 2 ways stretch.
- Breathable and machine washable.
- Pull over elastic band with size label.
- Colour: Preferably Black, alternately Navy Blue.

3.2.8 WATERPROOF WHEELCHAIR CUSHION COVER TO FIT WEDGED, THIN FOAM, POSITIONER WITH CONTOURED BASE, EXTENDED LENGTH

Size range:

- 51 cm wide; 50 cm long; 4 cm high at rear, 9 cm in front
- 46 cm wide; 50 cm long; 4 cm high at rear, 9 cm in front
- 43 cm wide; 50 cm long; 4 cm high at rear, 9 cm in front
- 41 cm wide; 50 cm long; 4 cm high at rear, 9 cm in front
- 38 cm wide; 50 cm long; 4 cm high at rear, 9 cm in front
- 36 cm wide; 50 cm long; 4 cm high at rear, 9 cm in front
- 30 cm wide; 50 cm long; 4 cm high at rear, 8.5 cm in front

✓ Variance allowed on overall measurement for cushions: +1 cm

Description of cushion cover:

- Fabric, waterproof, terry cloth covered.
- 2 ways stretch, breathable, anti-microbial shield treatment.
- Machine washable.
- Colour: Preferably Black, alternately Navy Blue.

3.3 WHEELCHAIR CUSHION COVERS FOR STRAIGHT BASE, BASIC FOAM

3.3.1 NYLON WHEELCHAIR CUSHION COVER TO FIT STRAIGHT BASE, THICK PRESSURE CARE CUSHION WITH NO ABDUCTION BLOCK

Size Range:

- 20 cm wide, 25 cm long, 9cm high
- 22.5 cm wide, 25 cm long, 9cm high
- 25 cm wide, 35 cm long, 9cm high
- 27.5 cm wide, 40 cm long, 9cm high
- 30 cm wide, 35 cm long, 9cm high
- 30 cm wide, 40 cm long, , 9cm high
- 36 cm wide, 40 cm long, , 9cm high
- 36 cm wide , 50 cm long, 9cm high
- 38cm wide, 50cm long, 9cm high
- 40 cm wide, 50 cm long, 9cm high
- 43 cm wide, 50 cm long, 9cm high
- 45 cm wide, 50 cm long, 9cm high
- 51 cm wide, 50 cm long, 9cm high

✓ Variance allowed on overall measurement for cushions: width: +1 cm

Description of cushion cover:

- Heavy duty nylon (300g/m²), colour fast.
- 2 ways stretch.
- Breathable and machine washable.
- Pull over elastic band with size label.
- Colour: Preferably Black, alternately Navy Blue.

3.3.2 NYLON WHEELCHAIR CUSHION COVER TO FIT STRAIGHT BASE, THICK PRESSURE CARE CUSHION WITH ABDUCTION BLOCK

Size Range:

- 20 cm wide, 25 cm long, 9cm high with extra-small abduction block
- 22.5 cm wide, 25 cm long, 9cm high with extra-small abduction block
- 25 cm wide, 35 cm long, 9cm high with extra-small abduction block
- 27.5 cm wide, 40 cm long, 9cm high with extra-small abduction block
- 30 cm wide, 35 cm long, 9cm high, with small abduction block
- 30 cm wide, 40 cm long, 9cm high, with small abduction block
- 35 cm wide, 40 cm long, 9cm high, with small abduction block
- 36 cm wide, 50 cm long, 9cm high, with small abduction block
- 38cm wide, 50cm long, 9cm high, with small abduction block
- 41 cm wide, 50 cm long, 9cm high with large abduction block
- 43 cm wide, 50 cm long, 9cm high with large abduction block
- 46 cm wide, 50 cm long, 9cm high with large abduction block
- 51 cm wide, 50 cm long, 9cm high with large abduction block

✓ Variance allowed on overall measurement for cushions: width: +1 cm

Description of cushion cover:

- Heavy duty nylon (300g/m²), colour fast.
- 2 ways stretch.
- Breathable and machine washable.
- Pull over elastic band with size label.
- Colour: Preferably Black, alternately Navy Blue.

3.3.3 WATERPROOF WHEELCHAIR CUSHION COVER TO FIT STRAIGHT BASE, THICK PRESSURE CARE WITH NO ABDUCTION BLOCK

Size Range:

- 20 cm wide, 25 cm long, 9cm high
- 22.5 cm wide, 25 cm long, 9cm high
- 25 cm wide, 35 cm long, 9cm high
- 27.5 cm wide, 40 cm long, 9cm high
- 30 cm wide, 35 cm long, 9cm high
- 30 cm wide, 40 cm long, 9cm high
- 36 cm wide, 40 cm long, 9cm high
- 36 cm wide , 50 cm long, 9cm high
- 38cm wide, 50cm long, 9cm high
- 40 cm wide, 50 cm long, 9cm high
- 43 cm wide, 50 cm long, 9cm high
- 45 cm wide, 50 cm long, 9cm high
- 51 cm wide, 50 cm long, 9cm high

✓ Variance allowed on overall measurement for cushions: width: +1 cm

Description of cushion cover:

- Fabric, waterproof, terry cloth covered.
- 2 ways stretch, breathable, anti-microbial shield treatment.
- Machine washable.
- Colour: Preferably Black, alternately Navy Blue.

3.3.4 WATERPROOF WHEELCHAIR CUSHION COVER TO FIT STRAIGHT BASE, THICK PRESSURE CARE CUSHION WITH ABDUCTION BLOCK

Size Range:

- 20 cm wide, 25 cm long, 9cm high with extra-small abduction block
- 22.5 cm wide, 25 cm long, 9cm high with extra-small abduction block
- 25 cm wide, 35 cm long, 9cm high with extra-small abduction block
- 27.5 cm wide, 40 cm long, 9cm high with extra-small abduction block
- 30 cm wide, 35 cm long, 9cm high, with small abduction block
- 30 cm wide, 40 cm long, 9cm high, with small abduction block
- 35 cm wide, 40 cm long, 9cm high, with small abduction block
- 36 cm wide, 50 cm long, 9cm high, with small abduction block
- 38 cm wide, 50cm long, 9cm high, with small abduction block
- 41 cm wide, 50 cm long, 9cm high with large abduction block
- 43 cm wide, 50 cm long, 9cm high with large abduction block
- 46 cm wide, 50 cm long, 9cm high with large abduction block
- 51 cm wide, 50 cm long, 9cm high with large abduction block

✓ Variance allowed on overall measurement for cushions: width: +1 cm

Description of cushion cover:

- Fabric, waterproof, terry cloth covered.
- 2 ways stretch, breathable, anti-microbial shield treatment.
- Machine washable and can be dried in tumble drier.
- Colour: Preferably Black, alternately Navy Blue.

3.3.5 NYLON WHEELCHAIR CUSHION COVER TO FIT STRAIGHT BASE, THIN FOAM POSITIONER WITH NO ABDUCTION BLOCK

Size Range:

- 20 cm wide, 25 cm long, 7cm high
- 22.5 cm wide, 25 cm long, 7cm high
- 25 cm wide, 35 cm long, 7cm high
- 27.5 cm wide, 40 cm long, 7cm high
- 30 cm wide, 35 cm long, 7cm high
- 30 cm wide, 40 cm long, 7cm high
- 35 cm wide, 40 cm long, 7cm high
- 36 cm wide, 50 cm long, 7cm high
- 38 cm wide, 50 cm long, 7 cm high
- 41 cm wide, 50 cm long, 7cm high
- 43 cm wide, 50 cm long, 7cm high
- 46 cm wide, 50 cm long, 7cm high
- 51 cm wide, 50 cm long, 7cm high

✓ Variance allowed on overall measurement for cushions: width: +1 cm

Description of cushion cover:

- Heavy duty nylon (300g/m²), colour fast.
- 2 ways stretch.
- Breathable and machine washable.
- Pull over elastic band with size label.
- Colour: Preferably Black, alternately Navy Blue.

3.3.6 NYLON WHEELCHAIR CUSHION COVER TO FIT STRAIGHT BASE, THIN FOAM POSITIONER WITH ABDUCTION BLOCK

Size Range:

- 20 cm wide, 25 cm long, 7cm high with extra-small abduction block
- 22.5 cm wide, 25 cm long, 7cm high with extra-small abduction block
- 25 cm wide, 35 cm long, 7cm high with extra-small abduction block
- 27.5 cm wide, 40 cm long, 7cm high with extra-small abduction block
- 30 cm wide, 35 cm long, 7cm high with small abduction block
- 30 cm wide, 40 cm long, 7cm high with small abduction block
- 35 cm wide, 40 cm long, 7cm high with small abduction block
- 36 cm wide, 50 cm long, 7cm high with small abduction block
- 38 cm wide, 50 cm long, 7 cm high with small abduction block
- 41 cm wide, 50 cm long, 7cm high with large abduction block
- 43 cm wide, 50 cm long, 7cm high with large abduction block
- 46 cm wide, 50 cm long, 7cm high with large abduction block
- 51 cm wide, 50 cm long, 7cm high with large abduction block

✓ Variance allowed on overall measurement for cushions: width: +1 cm

Description of cushion cover:

- Heavy duty nylon (300g/m²), colour fast.
- 2 ways stretch.
- Breathable and machine washable.
- Pull over elastic band with size label.
- Colour: Preferably Black, alternately Navy Blue.

3.3.7 WATERPROOF WHEELCHAIR CUSHION COVER TO FIT STRAIGHT BASE, THIN FOAM POSITIONER WITH NO ABDUCTION BLOCK

Size Range:

- 20 cm wide, 25 cm long, 7cm high
- 22.5 cm wide, 25 cm long, 7cm high
- 25 cm wide, 35 cm long, 7cm high
- 27.5 cm wide, 40 cm long, 7cm high
- 30 cm wide, 35 cm long, 7cm high
- 30 cm wide, 40 cm long, 7cm high
- 35 cm wide, 40 cm long, 7cm high
- 36 cm wide, 50 cm long, 7cm high
- 38 cm wide, 50 cm long, 7 cm high
- 41 cm wide, 50 cm long, 7cm high
- 43 cm wide, 50 cm long, 7cm high
- 46 cm wide, 50 cm long, 7cm high
- 51 cm wide, 50 cm long, 7cm high

✓ Variance allowed on overall measurement for cushions: width: +1 cm.

Description of cushion cover:

- Fabric, waterproof, terry cloth covered.
- 2 ways stretch, breathable, anti-microbial shield treatment.
- Machine washable.
- Colour: Preferably Black, alternately Navy Blue..

3.3.8 WATERPROOF WHEELCHAIR COVER TO FIT STRAIGHT BASE, THIN FOAM POSITIONER WITH ABDUCTION BLOCK

Size Range:

- 20 cm wide, 25 cm long, 7cm high with extra-small abduction block
- 22.5 cm wide, 25 cm long, 7cm high with extra-small abduction block
- 25 cm wide, 35 cm long, 7cm high with extra-small abduction block
- 27.5 cm wide, 40 cm long, 7cm high with extra-small abduction block
- 30 cm wide, 35 cm long, 7cm high with small abduction block
- 30 cm wide, 40 cm long, 7cm high with small abduction block
- 35 cm wide, 40 cm long, 7cm high with small abduction block
- 36 cm wide, 50 cm long, 7cm high with small abduction block
- 38 cm wide, 50 cm long, 7 cm high with small abduction block
- 41 cm wide, 50 cm long, 7cm high with large abduction block
- 43 cm wide, 50 cm long, 7cm high with large abduction block
- 46 cm wide, 50 cm long, 7cm high with large abduction block
- 51 cm wide, 50 cm long, 7cm high with large abduction block

✓ Variance allowed on overall measurement for cushions: width: +1 cm.

Description of cushion cover:

- Fabric, waterproof, terry cloth covered.
- 2 ways stretch, breathable, anti-microbial shield treatment.
- Machine washable.
- Colour: Preferably Black, alternately Navy Blue

3.4 WHEELCHAIR CUSHION COVER FABRIC

3.4.1 WHEELCHAIR CUSHION COVER FABRIC, BASIC NYLON STRETCHABLE

Fabric, heavy-duty nylon (300 g/m^2), colour fast, 2-way stretch, breathable, and machine washable, tube at least 55 cm wide, Colour: Preferably in Black alternately in Navy Blue. Order per meter.

3.4.2 WHEELCHAIR CUSHION COVER FABRIC, WATERPROOF, STRETCHABLE

Fabric, waterproof, terry cloth cotton covered, 2-way stretch, breathable, anti-microbial shield treatment, machine washable, and 150 cm wide. Colour: Preferably in Black alternately in Navy Blue. Order per meter.

3.5 FLUID FILLED WHEELCHAIR CUSHION COVER

- Separate removable base cover.
- Separate removable base cover waterproof.
- Separate removable external cover. External cover to allow moulding with fluid pad without interfering with pressure relieving properties.

3.6 AIR FILLED WHEELCHAIR CUSHION COVERS

- Separate stretchable, removable cover. Cover machine washable.
- Non-slip bottom of cover with hook and loop strips to attach cushion to wheelchair.
- Type, size, and direction of cushion use printed on cover.

END OF CATEGORY 3

4 CATEGORY 4 : WHEELCHAIR CUSHIONS WITH COVERS

4.1 BASIC FOAM WHEELCHAIR CUSHIONS WITH NYLON COVERS

4.1.1 CONTOURED BASE THICK PRESSURE CARE WHEELCHAIR CUSHION WITH NYLON COVER

Variance allowed on overall measurement +1 cm

Size range:

- 61 cm wide, 43 cm long, 9 cm high in front
- 56 cm wide, 43 cm long, 9 cm high in front
- 51 cm wide, 43 cm long, 9 cm high in front
- 46 cm wide, 43 cm long, 9 cm high in front
- 41 cm wide, 43 cm long, 9 cm high in front
- 38 cm wide, 43 cm long, 9 cm high in front
- 36 cm wide, 43 cm long, 9 cm high in front
- 30 cm wide, 43 cm long, 9 cm high in front
- 30 cm wide, 30 cm long, 6.5cm high in front
- 25 cm wide, 30 cm long, 6 cm high in front

Description of Cushion:

- Wheelchair basic foam pressure relieving cushion, Bevelled contoured base to match sling of seat of wheelchair
- Must have trochanteric loading pads to create a well
- All cushions not to be glued at the back
- The depth of the well for 14”(36cm) – 24”(61cm) should be 3 cm, for 12”(30cm) should be 2.5cm, and 10”(25cm) should be 2cm.
- The width of the well = 50% the width of the cushion
- Length of the well = the width of the well up to a maximum of 20cm.
- Sizes 14”-24”: Top layer – 5cm thick high density foam following the contour of the base through the full length of the cushion, only the front half of the cushion to be glued
- Type, size and direction of use printed on bottom of base

Material:

Top layer:

For sizes: 25cm - 46cm

High-density foam 36/20; Hardness factor 18-21.6; Density range 32.1-40kg/m³

For sizes: 51cm-61cm

High density foam 50/30 Hardness factor: 249-291 and Density: 37.1- 41kg/m³

Base layer:

High density compressed (reconstituted flexible PU) foam 1300; Hardness factor-52-63; Density 130±10% kg/m³ (SANS 642 - 1976)

Description of cushion cover:

- Heavy duty nylon (300g/m²), colour fast.
- 2 ways stretch.
- Breathable and machine washable.
- Pull over elastic band with size label.
- Colour: Preferably Black, alternately Navy Blue

4.1.2 CONTOURED BASE - WEDGED, THICK PRESSURE CARE WHEELCHAIR CUSHION WITH NYLON COVER

Variance allowed on overall measurement: +1 cm
Variance allowed on front height: +0.5cm

Size range:

- 61 cm wide; 43 cm long; 6 cm high at rear, 11 cm high in front
- 56 cm wide; 43 cm long; 6 cm high at rear, 11 cm high in front
- 51 cm wide; 43 cm long; 6 cm high at rear, 11 cm high in front
- 46 cm wide; 43 cm long; 6 cm high at rear, 11 cm high in front
- 41 cm wide; 43 cm long; 6 cm high at rear, 11 cm high in front
- 38 cm wide; 43 cm long; 6 cm high at rear, 11 cm high in front
- 36 cm wide; 43 cm long; 6 cm high at rear, 11 cm high in front
- 30 cm wide; 43 cm long; 6 cm high at rear, 11 cm high in front
- 30 cm wide; 30 cm long; 4 cm high at rear, 8.5 cm high in front
- 25 cm wide; 30 cm long; 4 cm high at rear, 7.5 cm high in front

Description of cushion:

- Wheelchair basic foam pressure relieving cushion. Bevelled contoured base to match sling seat of wheelchair.
- Must have trochanteric loading pads to create a well.
- The depth of the well for 14” (36cm) - 24” (61cm) should be 3cm, 12” (30cm) should be 2,5cm and 10’ (2cm) .
- The width of the well = 50% of the width of the cushion.
- Length of the well = the width of the well up to maximum 20cm.
- 2cm wedge in front of pre-ischial shelf extending to the front of the cushion.
- Sizes 14”-24”: Top layer - 5cm thick high-density foam following contour of base through full length of cushion; only the front half of the cushion to be glued.
- Size 10” -12”: Top - 3 cm thick high-density foam following contour of base through full length of cushion; only the front half of the cushion to be glued.
- Type, size, and direction of cushion use printed on bottom of base.

Material:

Top layer:

For sizes: 25cm – 46 cm
High-density foam 36/20; Hardness factor 18 – 21.6; Density range 32.1-40kg/m³

For sizes: 51cm -61cm
High density foam 50/30 Hardness factor: 249 - 291 and Density: 37.1- 41kg/m³

Base layer:

High density compressed (reconstituted flexible PU) foam 1300; Hardness factor 52-63; Density 130±10% kg/m³ (SANS 642 - 1976)

Description of cushion cover:

- Heavy duty nylon (300g/m²), colour fast.
- 2 ways stretch.
- Breathable and machine washable.
- Pull over elastic band with size label.
- Colour: Preferably Black, alternately Navy Blue

4.1.3 CONTOURED BASE - THIN FOAM, BASIC POSITIONER WHEELCHAIR CUSHION WITH NYLON COVER

Variance allowed on overall measurement : +1 cm

Size range:

- 51 cm wide; 43 cm long; 7 cm high
- 46 cm wide; 43 cm long; 7 cm high
- 43 cm wide; 43 cm long; 7 cm high
- 41 cm wide; 43 cm long; 7 cm high
- 38 cm wide; 43 cm long; 7 cm high
- 36 cm wide; 43 cm long; 7 cm high
- 30 cm wide; 43 cm long; 6.5 cm high
- 30 cm wide; 33 cm long; 6.5 cm high
- 25 cm wide; 28 cm long; 6 cm high

Description of cushion:

- Bevelled contoured base to match sling seat of wheelchair. Sitting surface with pre-ischial shelf.
- The depth of the pre-ischial shelf for 14" (36cm) - 20 (51cm) should be 3cm minimum, for 12" (30cm) should be 2,5cm minimum, and for 10" (25cm) should be 2cm minimum.
- The distance of the shelf from the rear of the cushion = 50% of the width of the cushion up to maximum of 20cm.
- Top: 3cm thick high-density foam following contour of base through full length of cushion; only the front half of the cushion to be glued.
- Type, size, and direction of cushion use printed on bottom of base.

Material:

Top layer:

For sizes: 25cm - 48cm

High-density foam 36/20; Hardness factor 18 – 21.6; Density range 32.1-40kg/m³

For sizes: 51cm

High density foam 50/30 Hardness factor: 249 - 291 and Density: 37.1- 41kg/m³

Base layer:

High density compressed (reconstituted flexible PU) foam 1300; Hardness factor 52-63; Density 130±10% kg/m³ (SANS 642 - 1976)

Description of cushion cover:

- Heavy duty nylon (300g/m²), colour fast.
- 2 ways stretch.
- Breathable and machine washable.
- Pull over elastic band with size label.
- Colour: Preferably Black, alternately Navy Blue

4.1.4 CONTOURED BASE - WEDGED, THIN FOAM POSITIONER WITH NYLON COVER

Variance allowed on overall measurement: +1cm
Variance allowed on front height:+0.5cm

Size range:

- 51 cm wide; 43 cm long; 4 cm high at rear, 9 cm high in front
- 46 cm wide; 43 cm long; 4 cm high at rear, 9 cm high in front
- 43 cm wide; 43 cm long; 4 cm high at rear, 9 cm high in front
- 41 cm wide; 43 cm long; 4 cm high at rear, 9 cm high in front
- 38 cm wide; 43 cm long; 4 cm high at rear, 9 cm high in front
- 36 cm wide; 43 cm long; 4 cm high at rear, 9 cm high in front
- 30 cm wide; 43 cm long; 4 cm high at rear, 9 cm high in front
- 30 cm wide; 33 cm long; 4 cm high at rear, 8 cm high in front
- 25 cm wide; 28 cm long; 4 cm high at rear, 7.5cm high in front

Description of cushion:

- Bevelled contoured base to match sling seat of wheelchair. Sitting surface with pre-ischial shelf.
- The depth of the pre-ischial shelf for 14” (36cm) - 20” (51cm) should be 3cm minimum, 12” (30cm) should be 2,5cm minimum, and 10” (25cm) should be 2cm minimum.
- The distance of the shelf from the rear = 50% of the width of the cushion up to maximum of 20cm.
- 2cm wedge in front of pre-ischial shelf extending to the front of the cushion.
- Top: 3cm thick high-density foam following contour of base through full length of cushion; only the front half of the cushion to be glued.
- Type, size, and direction of cushion use printed on bottom of base.

Material:

Top layer:

For sizes: 25cm-46cm
High-density foam 36/20; Hardness factor 18 – 21.6; Density range 32.1-40kg/m³
For sizes: 51cm
High density foam 50/30 Hardness factor: 249 - 291 and Density: 37.1- 41kg/m³

Base layer:

High density compressed (reconstituted flexible PU) foam 1300; Hardness factor 52-63; Density 130±10% kg/m³ (SANS 642 - 1976)

Description of cushion cover:

- Heavy duty nylon (300g/m²), colour fast.
- 2 ways stretch.
- Breathable and machine washable.
- Pull over elastic band with size label.
- Colour: Preferably Black, alternately Navy Blue

4.1.5 CONTOURED BASE - THICK PRESSURE CARE WHEELCHAIR CUSHION, EXTENDED LENGTH WITH NYLON COVER

Variance allowed on overall measurement: +1cm

Size range:

- 61 cm wide; 50 cm long; 9 cm high
- 56 cm wide; 50 cm long; 9 cm high
- 51 cm wide; 50 cm long; 9 cm high
- 46 cm wide; 50 cm long; 9 cm high
- 43 cm wide; 50 cm long; 9 cm high
- 41 cm wide; 50 cm long; 9 cm high
- 38 cm wide; 50 cm long; 9 cm high
- 36 cm wide; 50 cm long; 8.5 cm high
- 30 cm wide; 50 cm long; 8.5 cm high

Description of cushion:

- Wheelchair basic foam pressure relieving cushion. Bevelled contoured base to match sling seat of wheelchair.
- Must have trochanteric loading pads to create a well.
- The depth of the well for 14” (36cm) - 24” (61cm) should be 3cm, for 12” (30cm) should be 2,5cm.
- The width of the well = 50% of the width of the cushion.
- Length of the well = the width of the well up to maximum 20cm.
- Size 14”-24”, 5cm thick high-density foam top layer following contour of base through full length of cushion; only the front half of the cushion to be glued.
- Size 12”, 3cm thick high-density foam top layer, following contour of base through full length of cushion; only the front half of the cushion to be glued.
- Type, size, and direction of cushion use printed on bottom of base.

Material:

Top layer:

For sizes: 30cm-46cm

High-density foam 36/20; Hardness factor 18 – 21.6; Density range 32.1-40kg/m³

For sizes: 51cm-61cm

High density foam 50/30 Hardness factor: 249 - 291 and Density: 37.1- 41kg/m³

Base layer:

High density compressed (reconstituted flexible PU) foam 1300; Hardness factor 52-63 Density 130+10% kg/m³ (SANS 642 - 1976)

Description of cushion cover:

- Heavy duty nylon (300g/m²), colour fast.
- 2 ways stretch.
- Breathable and machine washable.
- Pull over elastic band with size label.
- Colour: Preferably Black, alternately Navy Blue

4.1.6 CONTOURED BASE - WEDGED, THICK PRESSURE CARE WHEELCHAIR CUSHION, EXTENDED LENGTH WITH NYLON COVER

Variance allowed on overall measurement:+1cm

Size range:

- 61 cm wide; 50 cm long; 6 cm high at rear, 11 cm high in front
- 56 cm wide; 50 cm long; 6 cm high at rear, 11 cm high in front
- 51 cm wide; 50 cm long; 6 cm high at rear, 11 cm high in front
- 46 cm wide; 50 cm long; 6 cm high at rear, 11 cm high in front
- 43 cm wide; 50 cm long; 6 cm high at rear, 11 cm high in front
- 41 cm wide; 50 cm long; 6 cm high at rear, 11 cm high in front
- 38 cm wide; 50 cm long; 6 cm high at rear, 11cm high in front
- 36 cm wide; 50 cm long; 6 cm high at rear, 11 cm high in front
- 30 cm wide; 50 cm long; 6 cm high at rear, 10.5 cm high in front

Description of cushion:

- Wheelchair basic foam pressure relieving cushion. Bevelled contoured base to match sling seat of wheelchair.
- Must have trochanteric loading pads to create a well.
- The depth of the well for 14” (36cm) - 24” (61cm) should be 3cm, 12” (30cm) should be 2,5cm.
- The width of the well = 50% of the width of the cushion.
- Length of the well = the width of the well up to maximum 20cm.
- Size 14”-24”, 5cm thick high-density foam top layer, following contour of base; only the front half of the cushion to be glued.
- Size 12”, 3cm, thick high density foam top layer, following contour of base through full length of cushion, only the front half of the cushion to be glued.
- Type, size, and direction of cushion use printed on bottom of base.

Material:

Top layer:

For sizes: 30cm-46cm

High-density foam 36/20; Hardness factor 18 – 21.6; Density range 32.1-40kg/m³

For sizes: 51cm-61cm

High density foam 50/30 Hardness factor: 249 - 291 and Density: 37.1- 41kg/m³

Base layer:

High density compressed (reconstituted flexible PU) foam 1300; Hardness factor 52-63 Density 130+10% kg/m³ (SANS 642 - 1976)

Description of cushion cover:

- Heavy duty nylon (300g/m²), colour fast.
- 2 ways stretch.
- Breathable and machine washable.
- Pull over elastic band with size label.
- Colour: Preferably Black, alternately Navy Blue

4.1.7 CONTOURED BASED - THIN FOAM, BASIC POSITIONER WHEELCHAIR CUSHION, EXTENDED LENGTH WITH NYLON COVER

Variance allowed on overall measurement: +1cm

Size range:

- 51 cm wide; 50 cm long; 7 cm high in front
- 46 cm wide; 50 cm long; 7 cm high in front
- 43 cm wide; 50 cm long; 7 cm high in front
- 41 cm wide; 50 cm long; 7 cm high in front
- 38 cm wide; 50 cm long; 7 cm high in front
- 36 cm wide; 50 cm long; 7 cm high in front
- 30 cm wide; 50 cm long; 7 cm high in front

Description of cushion:

- Bevelled contoured base to match sling seat of wheelchair. Sitting surface with pre-ischial shelf.
- The depth of the pre-ischial shelf for 14" (36cm) - 20" (51cm) should be 3cm minimum; 12" (30cm) should be 2, 5cm minimum.
- The distance of the shelf from the rear of the cushion = 50% of the width of the cushion up to maximum of 20cm.
- Top: 3cm thick high-density foam following contour of base through full length of cushion; only the front half of the cushion to be glued.
- Type, size, and direction of cushion use printed on bottom of base.

Material:

Top layer:

For Sizes: 30cm -46cm

High-density foam 36/20; Hardness factor 18 – 21.6; Density range 32.1-40kg/m³

For sizes: 51cm

High density foam 50/30 Hardness factor: 249 - 291 and Density: 37.1- 41kg/m³

Base layer:

High density compressed (reconstituted flexible PU) foam 1300; Hardness factor 52-63; Density 130+10% kg/m³ (SANS 642 - 1976)

Description of cushion cover:

- Heavy duty nylon (300g/m²), colour fast.
- 2 ways stretch.
- Breathable and machine washable.
- Pull over elastic band with size label.
- Colour: Preferably Black, alternately Navy Blue

4.1.8 CONTOURED BASE – WEDGED THIN FOAM POSITIONER, EXTENDED LENGTH WITH NYLON WHEELCHAIR COVER

Variance allowed on overall measurement: +1 cm

Size range:

- 51 cm wide; 50 cm long; 4 cm high at rear, 9 cm in front
- 46 cm wide; 50 cm long; 4 cm high at rear, 9 cm in front
- 43 cm wide; 50 cm long; 4 cm high at rear, 9 cm in front
- 41 cm wide; 50 cm long; 4 cm high at rear, 9 cm in front
- 38 cm wide; 50 cm long; 4 cm high at rear, 9 cm in front
- 36 cm wide; 50 cm long; 4 cm high at rear, 9 cm in front
- 30 cm wide; 50 cm long; 4 cm high at rear, 8.5 cm in front

Description of cushion:

- Bevelled contoured base to match sling seat of wheelchair. Sitting surface with pre-ischial shelf.
- The depth of the pre-ischial shelf for 14" (36cm) - 20" (51cm) should be 3cm minimum, 12" (30cm) should be 2, 5 cm minimum.
- The distance of the shelf from the rear of the cushion = 50% of the width of the cushion up to maximum of 20cm.
- 2cm wedge in front of pre-ischial shelf extending to the front of the cushion.
- Top: 3cm thick high-density foam following contour of base through full length of cushion; only the front half of the cushion to be glued.
- Type, size, and direction of cushion use printed on bottom of base

Material:

Top layer:

For sizes: 30cm -46cm

High-density foam 36/20; Hardness factor 18 – 21.6; Density range 32.1-40kg/m³

For sizes: 51cm

High density foam 50/30 Hardness factor: 249 - 291 and Density: 37.1- 41kg/m³

Base layer:

High density compressed (reconstituted flexible PU) foam 1300; Hardness factor 52-63; Density 130+10% kg/m³ (SANS 642 - 1976)

Description of cushion cover:

- Heavy duty nylon (300g/m²), colour fast.
- 2 ways stretch.
- Breathable and machine washable.
- Pull over elastic band with size label.
- Colour: Preferably Black, alternately Navy Blue

4.1.9 NON-CONTOURED BASE - STRAIGHT BASE, BASIC FOAM, THICK PRESSURE CARE WHEELCHAIR CUSHION WITH NO ABDUCTION BLOCK WITH NYLON COVER

Variance allowed on overall measurement: +1cm

Size Range:

- 20 cm wide, 25 cm long, 9cm high
- 22.5 cm wide, 25 cm long, 9cm high
- 25 cm wide, 35 cm long, 9cm high
- 27.5 cm wide, 40 cm long, 9cm high
- 30 cm wide, 35 cm long, 9cm high
- 30 cm wide, 40 cm long, 9cm high
- 36 cm wide, 40 cm long, 9cm high
- 36 cm wide , 50 cm long, 9cm high
- 38cm wide, 50cm long, 9cm high
- 40 cm wide, 50 cm long, 9cm high
- 43 cm wide, 50 cm long, 9cm high
- 45 cm wide, 50 cm long, 9cm high
- 51 cm wide, 50 cm long, 9cm high

Description of cushion:

- Wheelchair basic foam pressure relieving cushion. Flat base to match solid wheelchair seat.
- Must have trochanteric loading pads to create a well.
- The depth of the well for 14” (36cm) - 20”(51cm) should be 3cm, for 8” (20cm) - 12”(30cm) should be 2,5cm.
- The width of the well = 50% of the width of the cushion
- The length of the well = the width of the well up to maximum 20cm.
- Base layer: Minimum thickness 4 cm for sizes 14”-20” and minimum thickness 3cm for 12” and minimum 2,5cm for 10” and smaller.
- The thickness of the top layer for 14” (36cm) -20” (51cm) should be 5cm minimum and for 8” (20cm) -12” (30cm) should be 3cm; only the front half of the cushion to be glued.
- Type, size, and direction of cushion use printed on bottom of base.

Material:

Top layer:

For sizes to fit: 8”-18”

High-density foam 36/20; Hardness factor 18 – 21.6; Density range 32.1-40kg/m³

For sizes: 20”

High density foam 50/30 Hardness factor: 249 - 291 and Density: 37.1- 41kg/m³

Base layer:

High density compressed (reconstituted flexible PU) foam 1300 Hardness factor 52-63; Density 130±10% kg/m³ (SANS 642 - 1976)

Description of cushion cover:

- Heavy duty nylon (300g/m²), colour fast.
- 2 ways stretch.
- Breathable and machine washable.
- Pull over elastic band with size label.
- Colour: Preferably Black, alternately Navy Blue

4.1.10 NON-CONTOURED BASE - STRAIGHT BASE, THICK PRESSURE CARE WHEELCHAIR CUSHION WITH ABDUCTION BLOCK AND NYLON COVER

Variance allowed on overall measurement: +1cm

Size Range:

- 20 cm wide, 25 cm long, 9cm high with extra-small abduction block
- 22.5 cm wide, 25 cm long, 9cm high with extra-small abduction block
- 25 cm wide, 35 cm long, 9cm high with extra-small abduction block
- 27.5 cm wide, 40 cm long, 9cm high with extra-small abduction block
- 30 cm wide, 35 cm long, 9cm high, with small abduction block
- 30 cm wide, 40 cm long, 9cm high, with small abduction block
- 35 cm wide, 40 cm long, 9cm high, with small abduction block
- 36 cm wide, 50 cm long, 9cm high, with small abduction block
- 38cm wide, 50cm long, 9cm high, with small abduction block
- 41 cm wide, 50 cm long, 9cm high with large abduction block
- 43 cm wide, 50 cm long, 9cm high with large abduction block
- 46 cm wide, 50 cm long, 9cm high with large abduction block
- 51 cm wide, 50 cm long, 9cm high with large abduction block

Description of cushion:

- Wheelchair basic foam pressure relieving cushion. Flat base to match solid wheelchair seat.
- Must have trochanteric loading pads to create a well.
- The depth of the well for 14” (36cm) - 20”(51cm) should be 3cm, for 8” (20cm) - 12”(30cm) should be 2,5cm.
- The width of the well = 50% of the width of the cushion
- The length of the well = the width of the well up to maximum 20cm.
- Base layer: Minimum thickness 4 cm for sizes 14”-20” and minimum thickness 3cm for 12” and minimum 2,5cm for 10” and smaller.
- The thickness of the top layer for 14” (36cm) -20” (51cm) should be 5cm minimum and for 8” (20cm) -12” (30cm) should be 3cm; only the front half of the cushion to be glued.
- The pommel should extend beyond the end of the cushion to reach the front of the user’s knees.
- The height of the pommel = the full thickness of the cushion from the base and includes average height of user’s thigh in the front.
- The length of the pommel should not be more than the distal third of the femur.
- Type, size, and direction of cushion use printed on bottom of base.

Material:

Top layer:

For sizes to fit: 8”-18”

High-density foam 36/20; Hardness factor 18 – 21.6; Density range 32.1-40kg/m³

For sizes: 20”

High density foam 50/30 Hardness factor: 249 - 291 and Density: 37.1- 41kg/m³

Base layer:
High density compressed (reconstituted flexible PU) foam 1300 Hardness factor 52-63; Density 130±10% kg/m³ (SANS 642 - 1976)

Description of cushion cover:

- Heavy duty nylon (300g/m²), colour fast.
- 2 ways stretch.
- Breathable and machine washable.
- Pull over elastic band with size label.
- Colour: Preferably Black, alternately Navy Blue

4.1.11 NON-CONTOURED BASE - STRAIGHT BASE, POSITIONER WITH NO ABDUCTION BLOCK WITH NYLON WHEELCHAIR COVER

Variance allowed on overall measurement: +1cm

- 20 cm wide, 25 cm long, 7cm high
- 22.5 cm wide, 25 cm long, 7cm high
- 25 cm wide, 35 cm long, 7cm high
- 27.5 cm wide, 40 cm long, 7cm high
- 30 cm wide, 35 cm long, 7cm high
- 30 cm wide, 40 cm long, 7cm high
- 36 cm wide, 40 cm long, 7cm high
- 36 cm wide, 50 cm long, 7cm high
- 38cm wide, 50cm long, 7 cm high
- 40 cm wide, 50 cm long, 7cm high
- 43 cm wide, 50 cm long, 7cm high
- 45 cm wide, 50 cm long, 7cm high
- 51 cm wide, 50 cm long, 7cm high

Description of cushion:

- Wheelchair basic foam positioner cushion. Flat base to match solid wheelchair seat
- Sitting surface with pre-ischial shelf.
- The depth of the pre-ischial shelf for 14” (36cm) - 20” (51cm) should be 3cm minimum, 12” (30cm) should be 2,5 cm minimum.
- The distance of the shelf from the rear of the cushion = 50% of the width of the cushion up to maximum of 20cm.
- Base layer: Minimum thickness 4cm for sizes 14”-20” and minimum thickness 3cm for 12” and minimum 2,5cm for 10” and smaller.
- The thickness of the top layer for 14” (36cm) -20” (51cm) should be 3cm minimum and for 8” (20cm) -12” (30cm) should be 2.5cm.; only the front half of the cushion to be glued.
- Type, size, and direction of cushion use printed on bottom of base.

Material:

Top layer:

For sizes to fit: 8”-18”

High-density foam 36/20; Hardness factor 18 – 21.6; Density range 32.1-40kg/m³

For sizes: 20”

High density foam 50/30 Hardness factor: 249 - 291 and Density: 37.1- 41kg/m³

Base layer:

High density compressed (reconstituted flexible PU) foam 1300 Hardness factor 52-63: Density 130±10% kg/m³ (SANS 642 - 1976)

Description of cushion cover:

- Heavy duty nylon (300g/m²), colour fast.
- 2 ways stretch.
- Breathable and machine washable.
- Pull over elastic band with size label.
- Colour: Preferably Black, alternately Navy Blue

4.1.12 NON-CONTOURED BASE - STRAIGHT BASE, POSITIONER WITH ABDUCTION BLOCK WITH NYLON WHEELCHAIR COVER

Variance allowed on overall measurement: +1cm

Size Range:

- 20 cm wide, 25 cm long, 7cm high with extra-small abduction block
- 22.5 cm wide, 25 cm long, 7cm high with extra-small abduction block
- 25 cm wide, 35 cm long, 7cm high with extra-small abduction block
- 27.5 cm wide, 40 cm long, 7cm high with extra-small abduction block
- 30 cm wide, 35 cm long, 7cm high with small abduction block
- 30 cm wide, 40 cm long, 7cm high with small abduction block
- 35 cm wide, 40 cm long, 7cm high with small abduction block
- 36 cm wide, 50 cm long, 7cm high with small abduction bloc
- 41 cm wide, 50 cm long, 7cm high with large abduction block
- 43 cm wide, 50 cm long, 7cm high with large abduction block
- 46 cm wide, 50 cm long, 7cm high with large abduction block
- 51 cm wide, 50 cm long, 7cm high with large abduction block

Description:

- Wheelchair basic foam positioner cushion. Flat base to match solid wheelchair seat
- Sitting surface with pre-ischial shelf.
- The depth of the well for 14” (36cm) - 20”(51cm) should be 30mm, for 12”(30cm) should be 2,5cm.
- The distance of the shelf from the rear of the cushion = 50% of the width of the cushion up to maximum of 20cm.
- Base layer: Minimum thickness 4cm for sizes 14”-20” and minimum thickness 3cm for 12” and minimum 2,5cm for 10” and smaller.
- The thickness of the top layer for 14” (36cm) -20” (51cm) should be 3cm minimum and for 8” (20cm) -12” (30cm) should be 2.5cm.; only the front half of the cushion to be glued.
- The pommel should extend beyond the end of the cushion to reach the front of the user’s knees.
- The height of the pommel = the full thickness of the cushion from the base and includes average height of user’s thigh in the front.
- The length of the pommel should not be more than the distal third of the femur.
- Type, size, and direction of cushion use printed on bottom of base.

Material:

Top layer:

For sizes to fit: 8”-18”

High-density foam 36/20; Hardness factor 18 – 21.6; Density range 32.1-40kg/m³

For sizes: 20”

High density foam 50/30 Hardness factor: 249 - 291 and Density: 37.1- 41kg/m³

Base layer:
High density compressed (reconstituted flexible PU) foam 1300 Hardness factor 52-63: Density 130±10% kg/m³ (SANS 642 - 1976)

Description of cushion cover:

- Heavy duty nylon (300g/m²), colour fast.
- 2 ways stretch.
- Breathable and machine washable.
- Pull over elastic band with size label.
- Colour: Preferably Black, alternately Navy Blue

4.2 BASIC FOAM CUSHIONS WITH WATERPROOF COVERS

4.2.1 CONTOURED BASE THICK PRESSURE CARE WHEELCHAIR CUSHION WITH WATERPROOF COVER

Variance allowed on overall measurement +1 cm

Size range:

- 61 cm wide, 43 cm long, 9 cm high in front
- 56 cm wide, 43 cm long, 9 cm high in front
- 51 cm wide, 43 cm long, 9 cm high in front
- 46 cm wide, 43 cm long, 9 cm high in front
- 41 cm wide, 43 cm long, 9 cm high in front
- 38 cm wide, 43 cm long, 9 cm high in front
- 36 cm wide, 43 cm long, 9 cm high in front
- 30 cm wide, 43 cm long, 9 cm high in front
- 30 cm wide, 30 cm long, 6.5cm high in front
- 25 cm wide, 30 cm long, 6 cm high in front

Description of Cushion:

- Wheelchair basic foam pressure relieving cushion, Bevelled contoured base to match sling of seat of wheelchair
- Must have trochanteric loading pads to create a well
- All cushions not to be glued at the back
- The depth of the well for 14”(36cm) – 24”(61cm) should be 3 cm, for 12”(30cm) should be 2.5cm, and 10”(25cm) should be 2cm.
- The width of the well = 50% the width of the cushion
- Length of the well = the width of the well up to a maximum of 20cm.
- Sizes 14”-24”: Top layer – 5cm thick high density foam following the contour of the base through the full length of the cushion, only the front half of the cushion to be glued
- Type, size and direction of use printed on bottom of base

Material:

Top layer:

For sizes: 25cm - 46cm

High-density foam 36/20; Hardness factor 18-21.6; Density range 32.1-40kg/m³

For sizes: 51cm-61cm

High density foam 50/30 Hardness factor: 249-291 and Density: 37.1- 41kg/m³

Base layer:

High density compressed (reconstituted flexible PU) foam 1300; Hardness factor-52-63; Density 130±10% kg/m³ (SANS 642 - 1976)

Description of cushion cover:

- Fabric, waterproof, terry cloth covered.
- 2 ways stretch, breathable, anti-microbial shield treatment.
- Machine washable.
- Pull over elastic band with size label.
- Colour: Preferably Black, alternately Navy Blue.

4.2.2 CONTOURED BASE - WEDGED, THICK PRESSURE CARE WHEELCHAIR CUSHION WITH WATERPROOF COVER

Variance allowed on overall measurement: +1 cm
Variance allowed on front height: +0.5cm

Size range:

- 61 cm wide; 43 cm long; 6 cm high at rear, 11 cm high in front
- 56 cm wide; 43 cm long; 6 cm high at rear, 11 cm high in front
- 51 cm wide; 43 cm long; 6 cm high at rear, 11 cm high in front
- 46 cm wide; 43 cm long; 6 cm high at rear, 11 cm high in front
- 41 cm wide; 43 cm long; 6 cm high at rear, 11 cm high in front
- 38 cm wide; 43 cm long; 6 cm high at rear, 11 cm high in front
- 36 cm wide; 43 cm long; 6 cm high at rear, 11 cm high in front
- 30 cm wide; 43 cm long; 6 cm high at rear, 11 cm high in front
- 30 cm wide; 30 cm long; 4 cm high at rear, 8.5 cm high in front
- 25 cm wide; 30 cm long; 4 cm high at rear, 7.5 cm high in front

Description of cushion:

- Wheelchair basic foam pressure relieving cushion. Bevelled contoured base to match sling seat of wheelchair.
- Must have trochanteric loading pads to create a well.
- The depth of the well for 14” (36cm) - 24” (61cm) should be 3cm, 12” (30cm) should be 2,5cm and 10’ (2cm) .
- The width of the well = 50% of the width of the cushion.
- Length of the well = the width of the well up to maximum 20cm.
- 2cm wedge in front of pre-ischial shelf extending to the front of the cushion.
- Sizes 14”-24”: Top layer - 5cm thick high-density foam following contour of base through full length of cushion; only the front half of the cushion to be glued.
- Size 10” -12”: Top - 3 cm thick high-density foam following contour of base through full length of cushion; only the front half of the cushion to be glued.
- Type, size, and direction of cushion use printed on bottom of base.

Material:

Top layer:

For sizes: 25cm – 46 cm
High-density foam 36/20; Hardness factor 18 – 21.6; Density range 32.1-40kg/m³

For sizes: 51cm -61cm
High density foam 50/30 Hardness factor: 249 - 291 and Density: 37.1- 41kg/m³

Base layer:

High density compressed (reconstituted flexible PU) foam 1300; Hardness factor 52-63; Density 130±10% kg/m³ (SANS 642 - 1976)

Description of cushion cover:

- Fabric, waterproof, terry cloth covered.
- 2 ways stretch, breathable, anti-microbial shield treatment.
- Machine washable.
- Pull over elastic band with size label.
- Colour: Preferably Black, alternately Navy Blue.

4.2.3 CONTOURED BASE - THIN FOAM, BASIC POSITIONER WHEELCHAIR CUSHION WITH WATERPROOF COVER

Variance allowed on overall measurement : +1 cm

Size range:

- 51 cm wide; 43 cm long; 7 cm high
- 46 cm wide; 43 cm long; 7 cm high
- 43 cm wide; 43 cm long; 7 cm high
- 41 cm wide; 43 cm long; 7 cm high
- 38 cm wide; 43 cm long; 7 cm high
- 36 cm wide; 43 cm long; 7 cm high
- 30 cm wide; 43 cm long; 6.5 cm high
- 30 cm wide; 33 cm long; 6.5 cm high
- 25 cm wide; 28 cm long; 6 cm high

Description of cushion:

- Bevelled contoured base to match sling seat of wheelchair. Sitting surface with pre-ischial shelf.
- The depth of the pre-ischial shelf for 14" (36cm) - 20 (51cm) should be 3cm minimum, for 12" (30cm) should be 2,5cm minimum, and for 10" (25cm) should be 2cm minimum.
- The distance of the shelf from the rear of the cushion = 50% of the width of the cushion up to maximum of 20cm.
- Top: 3cm thick high-density foam following contour of base through full length of cushion; only the front half of the cushion to be glued.
- Type, size, and direction of cushion use printed on bottom of base.

Material:

Top layer:

For sizes: 25cm - 48cm

High-density foam 36/20; Hardness factor 18 – 21.6; Density range 32.1-40kg/m³

For sizes: 51cm

High density foam 50/30 Hardness factor: 249 - 291 and Density: 37.1- 41kg/m³

Base layer:

High density compressed (reconstituted flexible PU) foam 1300; Hardness factor 52-63; Density 130±10% kg/m³ (SANS 642 - 1976)

Description of cushion cover:

- Fabric, waterproof, terry cloth covered.
- 2 ways stretch, breathable, anti-microbial shield treatment.
- Machine washable.
- Pull over elastic band with size label.
- Colour: Preferably Black, alternately Navy Blue.

4.2.4 CONTOURED BASE - WEDGED, THIN FOAM POSITIONER WITH WATERPROOF WHEELCHAIR COVER

Variance allowed on overall measurement: +1cm
Variance allowed on front height:+0.5cm

Size range:

- 51 cm wide; 43 cm long; 4 cm high at rear, 9 cm high in front
- 46 cm wide; 43 cm long; 4 cm high at rear, 9 cm high in front
- 43 cm wide; 43 cm long; 4 cm high at rear, 9 cm high in front
- 41 cm wide; 43 cm long; 4 cm high at rear, 9 cm high in front
- 38 cm wide; 43 cm long; 4 cm high at rear, 9 cm high in front
- 36 cm wide; 43 cm long; 4 cm high at rear, 9 cm high in front
- 30 cm wide; 43 cm long; 4 cm high at rear, 9 cm high in front
- 30 cm wide; 33 cm long; 4 cm high at rear, 8 cm high in front
- 25 cm wide; 28 cm long; 4 cm high at rear, 7.5cm high in front

Description of cushion:

- Bevelled contoured base to match sling seat of wheelchair. Sitting surface with pre-ischial shelf.
- The depth of the pre-ischial shelf for 14” (36cm) - 20” (51cm) should be 3cm minimum, 12” (30cm) should be 2,5cm minimum, and 10” (25cm) should be 2cm minimum.
- The distance of the shelf from the rear = 50% of the width of the cushion up to maximum of 20cm.
- 2cm wedge in front of pre-ischial shelf extending to the front of the cushion.
- Top: 3cm thick high-density foam following contour of base through full length of cushion; only the front half of the cushion to be glued.
- Type, size, and direction of cushion use printed on bottom of base.

Material:

Top layer:

For sizes: 25cm-46cm
High-density foam 36/20; Hardness factor 18 – 21.6; Density range 32.1-40kg/m³

For sizes: 51cm
High density foam 50/30 Hardness factor: 249 - 291 and Density: 37.1- 41kg/m³

Base layer:

High density compressed (reconstituted flexible PU) foam 1300; Hardness factor 52-63; Density 130±10% kg/m³ (SANS 642 - 1976)

Description of cushion cover:

- Fabric, waterproof, terry cloth covered.
- 2 ways stretch, breathable, anti-microbial shield treatment.
- Machine washable.
- Pull over elastic band with size label.
- Colour: Preferably Black, alternately Navy Blue.

4.2.5 CONTOURED BASE - THICK PRESSURE CARE WHEELCHAIR CUSHION, EXTENDED LENGTH WITH WATERPROOF COVER

Variance allowed on overall measurement: +1cm

Size range:

- 61 cm wide; 50 cm long; 9 cm high
- 56 cm wide; 50 cm long; 9 cm high
- 51 cm wide; 50 cm long; 9 cm high
- 46 cm wide; 50 cm long; 9 cm high
- 43 cm wide; 50 cm long; 9 cm high
- 41 cm wide; 50 cm long; 9 cm high
- 38 cm wide; 50 cm long; 9 cm high
- 36 cm wide; 50 cm long; 8.5 cm high
- 30 cm wide; 50 cm long; 8.5 cm high

Description of cushion:

- Wheelchair basic foam pressure relieving cushion. Bevelled contoured base to match sling seat of wheelchair.
- Must have trochanteric loading pads to create a well.
- The depth of the well for 14” (36cm) - 24” (61cm) should be 3cm, for 12” (30cm) should be 2,5cm.
- The width of the well = 50% of the width of the cushion.
- Length of the well = the width of the well up to maximum 20cm.
- Size 14”-24”, 5cm thick high-density foam top layer following contour of base through full length of cushion; only the front half of the cushion to be glued.
- Size 12”, 3cm thick high-density foam top layer, following contour of base through full length of cushion; only the front half of the cushion to be glued.
- Type, size, and direction of cushion use printed on bottom of base.

Material:

Top layer:

For sizes: 30cm-46cm

High-density foam 36/20; Hardness factor 18 – 21.6; Density range 32.1-40kg/m³

For sizes: 51cm-61cm

High density foam 50/30 Hardness factor: 249 - 291 and Density: 37.1- 41kg/m³

Base layer:

High density compressed (reconstituted flexible PU) foam 1300; Hardness factor 52-63 Density 130+10% kg/m³ (SANS 642 - 1976)

Description of cushion cover:

- Fabric, waterproof, terry cloth covered.
- 2 ways stretch, breathable, anti-microbial shield treatment.
- Machine washable.
- Pull over elastic band with size label.
- Colour: Preferably Black, alternately Navy Blue.

4.2.6 CONTOURED BASE - WEDGED, THICK PRESSURE CARE WHEELCHAIR CUSHION, EXTENDED LENGTH WITH WATERPROOF COVER

Variance allowed on overall measurement:+1cm

Size range:

- 61 cm wide; 50 cm long; 6 cm high at rear, 11 cm high in front
- 56 cm wide; 50 cm long; 6 cm high at rear, 11 cm high in front
- 51 cm wide; 50 cm long; 6 cm high at rear, 11 cm high in front
- 46 cm wide; 50 cm long; 6 cm high at rear, 11 cm high in front
- 43 cm wide; 50 cm long; 6 cm high at rear, 11 cm high in front
- 41 cm wide; 50 cm long; 6 cm high at rear, 11 cm high in front
- 38 cm wide; 50 cm long; 6 cm high at rear, 11cm high in front
- 36 cm wide; 50 cm long; 6 cm high at rear, 11 cm high in front
- 30 cm wide; 50 cm long; 6 cm high at rear, 10.5 cm high in front

Description of cushion:

- Wheelchair basic foam pressure relieving cushion. Bevelled contoured base to match sling seat of wheelchair.
- Must have trochanteric loading pads to create a well.
- The depth of the well for 14” (36cm) - 24” (61cm) should be 3cm, 12” (30cm) should be 2,5cm.
- The width of the well = 50% of the width of the cushion.
- Length of the well = the width of the well up to maximum 20cm.
- Size 14”-24”, 5cm thick high-density foam top layer, following contour of base; only the front half of the cushion to be glued.
- Size 12”, 3cm, thick high density foam top layer, following contour of base through full length of cushion, only the front half of the cushion to be glued.
- Type, size, and direction of cushion use printed on bottom of base.

Material:

Top layer:

For sizes: 30cm-46cm

High-density foam 36/20; Hardness factor 18 – 21.6; Density range 32.1-40kg/m³

For sizes: 51cm-61cm

High density foam 50/30 Hardness factor: 249 - 291 and Density: 37.1- 41kg/m³

Base layer:

High density compressed (reconstituted flexible PU) foam 1300; Hardness factor 52-63 Density 130+10% kg/m³ (SANS 642 - 1976)

Description of cushion cover:

- Fabric, waterproof, terry cloth covered.
- 2 ways stretch, breathable, anti-microbial shield treatment.
- Machine washable.
- Pull over elastic band with size label.

- Colour: Preferably Black, alternately Navy Blue.

4.2.7 CONTOURED BASED - THIN FOAM, BASIC POSITIONER WHEELCHAIR CUSHION, EXTENDED LENGTH WITH WATERPROOF COVER

Variance allowed on overall measurement: +1cm

Size range:

- 51 cm wide; 50 cm long; 7 cm high in front
- 46 cm wide; 50 cm long; 7 cm high in front
- 43 cm wide; 50 cm long; 7 cm high in front
- 41 cm wide; 50 cm long; 7 cm high in front
- 38 cm wide; 50 cm long; 7 cm high in front
- 36 cm wide; 50 cm long; 7 cm high in front
- 30 cm wide; 50 cm long; 7 cm high in front

Description of cushion:

- Bevelled contoured base to match sling seat of wheelchair. Sitting surface with pre-ischial shelf.
- The depth of the pre-ischial shelf for 14" (36cm) - 20" (51cm) should be 3cm minimum; 12" (30cm) should be 2, 5cm minimum.
- The distance of the shelf from the rear of the cushion = 50% of the width of the cushion up to maximum of 20cm.
- Top: 3cm thick high-density foam following contour of base through full length of cushion; only the front half of the cushion to be glued.
- Type, size, and direction of cushion use printed on bottom of base.

Material:

Top layer:

For Sizes: 30cm -46cm

High-density foam 36/20; Hardness factor 18 – 21.6; Density range 32.1-40kg/m³

For sizes: 51cm

High density foam 50/30 Hardness factor: 249 - 291 and Density: 37.1- 41kg/m³

Base layer:

High density compressed (reconstituted flexible PU) foam 1300; Hardness factor 52-63; Density 130+10% kg/m³ (SANS 642 - 1976)

Description of cushion cover:

- Fabric, waterproof, terry cloth covered.
- 2 ways stretch, breathable, anti-microbial shield treatment.
- Machine washable.
- Pull over elastic band with size label.
- Colour: Preferably Black, alternately Navy Blue.

4.2.8 CONTOURED BASE – WEDGED THIN FOAM POSITIONER, EXTENDED LENGTH WITH WATERPROOF WHEELCHAIR COVER

Variance allowed on overall measurement: +1 cm

Size range:

- 51 cm wide; 50 cm long; 4 cm high at rear, 9 cm in front
- 46 cm wide; 50 cm long; 4 cm high at rear, 9 cm in front
- 43 cm wide; 50 cm long; 4 cm high at rear, 9 cm in front
- 41 cm wide; 50 cm long; 4 cm high at rear, 9 cm in front
- 38 cm wide; 50 cm long; 4 cm high at rear, 9 cm in front
- 36 cm wide; 50 cm long; 4 cm high at rear, 9 cm in front
- 30 cm wide; 50 cm long; 4 cm high at rear, 8.5 cm in front

Description of cushion:

- Bevelled contoured base to match sling seat of wheelchair. Sitting surface with pre-ischial shelf.
- The depth of the pre-ischial shelf for 14" (36cm) - 20" (51cm) should be 3cm minimum, 12" (30cm) should be 2, 5 cm minimum.
- The distance of the shelf from the rear of the cushion = 50% of the width of the cushion up to maximum of 20cm.
- 2cm wedge in front of pre-ischial shelf extending to the front of the cushion.
- Top: 3cm thick high-density foam following contour of base through full length of cushion; only the front half of the cushion to be glued.
- Type, size, and direction of cushion use printed on bottom of base

Material:

Top layer:

For sizes: 30cm -46cm

High-density foam 36/20; Hardness factor 18 – 21.6; Density range 32.1-40kg/m³

For sizes: 51cm

High density foam 50/30 Hardness factor: 249 - 291 and Density: 37.1- 41kg/m³

Base layer:

High density compressed (reconstituted flexible PU) foam 1300; Hardness factor 52-63; Density 130+10% kg/m³ (SANS 642 - 1976)

Description of cushion cover:

- Fabric, waterproof, terry cloth covered.
- 2 ways stretch, breathable, anti-microbial shield treatment.
- Machine washable.
- Pull over elastic band with size label.
- Colour: Preferably Black, alternately Navy Blue.

4.2.9 NON-CONTOURED BASE - STRAIGHT BASE, BASIC FOAM, THICK PRESSURE CARE CUSHION WITH NO ABDUCTION BLOCK WITH WATERPROOF COVER

Variance allowed on overall measurement: +1cm

Size Range:

- 20 cm wide, 25 cm long, 9cm high
- 22.5 cm wide, 25 cm long, 9cm high
- 25 cm wide, 35 cm long, 9cm high
- 27.5 cm wide, 40 cm long, 9cm high
- 30 cm wide, 35 cm long, 9cm high
- 30 cm wide, 40 cm long, 9cm high
- 36 cm wide, 40 cm long, 9cm high
- 36 cm wide , 50 cm long, 9cm high
- 38cm wide, 50cm long, 9cm high
- 40 cm wide, 50 cm long, 9cm high
- 43 cm wide, 50 cm long, 9cm high
- 45 cm wide, 50 cm long, 9cm high
- 51 cm wide, 50 cm long, 9cm high

Description of cushion:

- Wheelchair basic foam pressure relieving cushion. Flat base to match solid wheelchair seat.
- Must have trochanteric loading pads to create a well.
- The depth of the well for 14” (36cm) - 20”(51cm) should be 3cm, for 8” (20cm) - 12”(30cm) should be 2,5cm.
- The width of the well = 50% of the width of the cushion
- The length of the well = the width of the well up to maximum 20cm.
- Base layer: Minimum thickness 4 cm for sizes 14”-20” and minimum thickness 3cm for 12” and minimum 2,5cm for 10” and smaller.
- The thickness of the top layer for 14” (36cm) -20” (51cm) should be 5cm minimum and for 8” (20cm) -12” (30cm) should be 3cm; only the front half of the cushion to be glued.
- Type, size, and direction of cushion use printed on bottom of base.

Material:

Top layer:

For sizes to fit: 8”-18”

High-density foam 36/20; Hardness factor 18 – 21.6; Density range 32.1-40kg/m³

For sizes: 20”

High density foam 50/30 Hardness factor: 249 - 291 and Density: 37.1- 41kg/m³

Base layer:

High density compressed (reconstituted flexible PU) foam 1300 Hardness factor 52-63; Density 130±10% kg/m³ (SANS 642 - 1976)

Description of cushion cover:

- Fabric, waterproof, terry cloth covered.
- 2 ways stretch, breathable, anti-microbial shield treatment.
- Machine washable.
- Pull over elastic band with size label.
- Colour: Preferably Black, alternately Navy Blue.

4.2.10 NON-CONTOURED BASE - STRAIGHT BASE, THICK PRESSURE CARE WHEELCHAIR CUSHION WITH ABDUCTION BLOCK AND WATERPROOF COVER

Variance allowed on overall measurement: +1cm

Size Range:

- 20 cm wide, 25 cm long, 9cm high with extra-small abduction block
- 22.5 cm wide, 25 cm long, 9cm high with extra-small abduction block
- 25 cm wide, 35 cm long, 9cm high with extra-small abduction block
- 27.5 cm wide, 40 cm long, 9cm high with extra-small abduction block
- 30 cm wide, 35 cm long, 9cm high, with small abduction block
- 30 cm wide, 40 cm long, 9cm high, with small abduction block
- 35 cm wide, 40 cm long, 9cm high, with small abduction block
- 36 cm wide, 50 cm long, 9cm high, with small abduction block
- 38cm wide, 50cm long, 9cm high, with small abduction block
- 41 cm wide, 50 cm long, 9cm high with large abduction block
- 43 cm wide, 50 cm long, 9cm high with large abduction block
- 46 cm wide, 50 cm long, 9cm high with large abduction block
- 51 cm wide, 50 cm long, 9cm high with large abduction block

Description of cushion:

- Wheelchair basic foam pressure relieving cushion. Flat base to match solid wheelchair seat.
- Must have trochanteric loading pads to create a well.
- The depth of the well for 14” (36cm) - 20”(51cm) should be 3cm, for 8” (20cm) - 12”(30cm) should be 2,5cm.
- The width of the well = 50% of the width of the cushion
- The length of the well = the width of the well up to maximum 20cm.
- Base layer: Minimum thickness 4 cm for sizes 14”-20” and minimum thickness 3cm for 12” and minimum 2,5cm for 10” and smaller.
- The thickness of the top layer for 14” (36cm) -20” (51cm) should be 5cm minimum and for 8” (20cm) -12” (30cm) should be 3cm; only the front half of the cushion to be glued.
- The pommel should extend beyond the end of the cushion to reach the front of the user’s knees.
- The height of the pommel = the full thickness of the cushion from the base and includes average height of user’s thigh in the front.
- The length of the pommel should not be more than the distal third of the femur.
- Type, size, and direction of cushion use printed on bottom of base.

Material:

Top layer:

For sizes to fit: 8”-18”

High-density foam 36/20; Hardness factor 18 – 21.6; Density range 32.1-40kg/m³

For sizes: 20”

High density foam 50/30 Hardness factor: 249 - 291 and Density: 37.1- 41kg/m³

Base layer:
High density compressed (reconstituted flexible PU) foam 1300 Hardness factor 52-63; Density 130±10% kg/m³ (SANS 642 - 1976)

Description of cushion cover:

- Fabric, waterproof, terry cloth covered.
- 2 ways stretch, breathable, anti-microbial shield treatment.
- Machine washable.
- Pull over elastic band with size label.
- Colour: Preferably Black, alternately Navy Blue.

4.2.11 NON-CONTOURED BASE - STRAIGHT BASE, POSITIONER WITH NO ABDUCTION BLOCK WITH WATERPROOF WHEELCHAIR COVER

Variance allowed on overall measurement: +1cm

Size Range:

- 20 cm wide, 25 cm long, 7cm high
- 22.5 cm wide, 25 cm long, 7cm high
- 25 cm wide, 35 cm long, 7cm high
- 27.5 cm wide, 40 cm long, 7cm high
- 30 cm wide, 35 cm long, 7cm high
- 30 cm wide, 40 cm long, 7cm high
- 36 cm wide, 40 cm long, 7cm high
- 36 cm wide, 50 cm long, 7cm high
- 38cm wide, 50cm long, 7 cm high
- 40 cm wide, 50 cm long, 7cm high
- 43 cm wide, 50 cm long, 7cm high
- 45 cm wide, 50 cm long, 7cm high
- 51 cm wide, 50 cm long, 7cm high

Description of cushion:

- Wheelchair basic foam positioner cushion. Flat base to match solid wheelchair seat
- Sitting surface with pre-ischial shelf.
- The depth of the pre-ischial shelf for 14” (36cm) - 20” (51cm) should be 3cm minimum, 12” (30cm) should be 2,5 cm minimum.
- The distance of the shelf from the rear of the cushion = 50% of the width of the cushion up to maximum of 20cm.
- Base layer: Minimum thickness 4cm for sizes 14”-20” and minimum thickness 3cm for 12” and minimum 2,5cm for 10” and smaller.
- The thickness of the top layer for 14” (36cm) -20” (51cm) should be 3cm minimum and for 8” (20cm) -12” (30cm) should be 2.5cm.; only the front half of the cushion to be glued.
- Type, size, and direction of cushion use printed on bottom of base.

Material:

Top layer:

For sizes to fit: 8”-18”

High-density foam 36/20; Hardness factor 18 – 21.6; Density range 32.1-40kg/m³

For sizes: 20”

High density foam 50/30 Hardness factor: 249 - 291 and Density: 37.1- 41kg/m³

Base layer:

High density compressed (reconstituted flexible PU) foam 1300 Hardness factor 52-63: Density 130±10% kg/m³ (SANS 642 - 1976)

Description of cushion cover:

- Fabric, waterproof, terry cloth covered.
- 2 ways stretch, breathable, anti-microbial shield treatment.
- Machine washable.
- Pull over elastic band with size label.
- Colour: Preferably Black, alternately Navy Blue.

4.2.12 NON-CONTOURED BASE - STRAIGHT BASE, POSITIONER WITH ABDUCTION BLOCK WITH WATERPROOF WHEELCHAIR COVER

Variance allowed on overall measurement: +1cm

Size Range:

- 20 cm wide, 25 cm long, 7cm high with extra-small abduction block
- 22.5 cm wide, 25 cm long, 7cm high with extra-small abduction block
- 25 cm wide, 35 cm long, 7cm high with extra-small abduction block
- 27.5 cm wide, 40 cm long, 7cm high with extra-small abduction block
- 30 cm wide, 35 cm long, 7cm high with small abduction block
- 30 cm wide, 40 cm long, 7cm high with small abduction block
- 35 cm wide, 40 cm long, 7cm high with small abduction block
- 36 cm wide, 50 cm long, 7cm high with small abduction block
- 41 cm wide, 50 cm long, 7cm high with large abduction block
- 43 cm wide, 50 cm long, 7cm high with large abduction block
- 46 cm wide, 50 cm long, 7cm high with large abduction block
- 51 cm wide, 50 cm long, 7cm high with large abduction block

Description:

- Wheelchair basic foam positioner cushion. Flat base to match solid wheelchair seat
- Sitting surface with pre-ischial shelf.
- The depth of the well for 14” (36cm) - 20”(51cm) should be 30mm, for 12”(30cm) should be 2,5cm.
- The distance of the shelf from the rear of the cushion = 50% of the width of the cushion up to maximum of 20cm.
- Base layer: Minimum thickness 4cm for sizes 14”-20” and minimum thickness 3cm for 12” and minimum 2,5cm for 10” and smaller.
- The thickness of the top layer for 14” (36cm) -20” (51cm) should be 3cm minimum and for 8” (20cm) -12” (30cm) should be 2.5cm.; only the front half of the cushion to be glued.
- The pommel should extend beyond the end of the cushion to reach the front of the user’s knees.
- The height of the pommel = the full thickness of the cushion from the base and includes average height of user’s thigh in the front.
- The length of the pommel should not be more than the distal third of the femur.
- Type, size, and direction of cushion use printed on bottom of base.

Material:

Top layer:

For sizes to fit: 8”-18”

High-density foam 36/20; Hardness factor 18 – 21.6; Density range 32.1-40kg/m³

For sizes: 20”

High density foam 50/30 Hardness factor: 249 - 291 and Density: 37.1- 41kg/m³

Base layer:
High density compressed (reconstituted flexible PU) foam 1300 Hardness factor 52-63: Density 130±10% kg/m³ (SANS 642 - 1976)

Description of cushion cover:

- Fabric, waterproof, terry cloth covered.
- 2 ways stretch, breathable, anti-microbial shield treatment.
- Machine washable.
- Pull over elastic band with size label.
- Colour: Preferably Black, alternately Navy Blue.

END OF CATEGORY 4

5 CATEGORY 5 : BACKREST SYSTEMS

5.1 TENSION ADJUSTABLE BACK

To fit both basic and adjustable folding frame wheelchairs

5.1.1 TENSION ADJUSTABLE BACK, STANDARD
5.1.2 TENSION ADJUSTABLE BACK, SHORT
5.1.3 TENSION ADJUSTABLE BACK, TALL

Size range:

Table 7: Tension Adjustable Back Size Ranges

Size (width)	Standard back height	Tall back height	Short back height
61 cm (24”)	47.5 cm	51 cm	-
56 cm (22”)	47.5 cm	51cm	-
51 cm (20")	45 cm	55 cm	35 cm
46 cm (18") (Cover range 43 cm (17”) to 46 cm (18"))	45 cm	55 cm	35 cm
41 cm (16") (cover range 38 cm (15") to 41 cm (16"))	45 cm	55 cm	35 cm
41 cm (16") (cover range 38 cm (15") to 41 cm (16"))	45 cm	55 cm	35 cm
36 cm (14")	45 cm	55 cm	35 cm
30 cm (12") wide with 40 cm seat frame length	45 cm	55 cm	35 cm
30 cm (12") wide with 30 cm seat frame length	35 cm	45 cm	Not applicable
25 cm (10") wide with 30 cm seat frame length	32-33 cm	Not applicable	Not applicable

Backrest components:

- 3-piece tension adjustable backrest.
- 2x side panels with full length tubes for fitting to wheelchair by either using screw-in type.
- Fixing (basic folding wheelchairs with seat guide) or slipping tube over back rest (adjustable folding frame wheelchairs). No pre-made screw holes are to be provided in the tubes. One panel to be fitted with straps the other with metal buckles.
- Panels: full length ±1cm from top and bottom: Hook and loop fasteners strip 4cm wide placed 5cm from edge. On panel fitted with straps, a second 4cm loop strap immediately adjacent to inside of first strip, thus providing 8cm wide loop section.
- A separate cover is provided. The front panel is padded. Front panel of cover to be clear of stitching, except for 7cm from edges. Front part of cover to be open from inside (pocket).

Backrest material:

- Nylon; Black; 600D or stronger Nylon for panels and tubes of tension adjustable panels; and appropriate nylon for cover; Tubes reinforced with 400gsm PVC or stronger; Cover front padded with 12mm thick high-density foam (30/20 with hardness 18.0 - 21.6; Density 27.1 – 32 kg/m³ or 26/20 with hardness 18.0 - 21.6; Density 24.1 – 27 kg/m³ or other suitable foam).

Backrest straps:

- Maximum 2,5cm wide straps no wider than 2cm apart; hook and loop fastenings; Must be able to conform to body contours when adjusted.
- Minimum of 10 evenly spaced for standard length, 8 for short length and 12 straps for tall back.

5.2 TENSION ADJUSTABLE BACKREST WITH RIGID HEIGHT ADJUSTABLE FULL-LENGTH LATERALS

Height adjustable full-length laterals to fit both basic and adjustable folding frame manual and power wheelchairs

5.2.1 TENSION ADJUSTABLE BACK WITH RIGID, HEIGHT ADJUSTABLE FULL-LENGTH LATERALS, SHORT

5.2.2 TENSION ADJUSTABLE BACK WITH RIGID, HEIGHT ADJUSTABLE FULL-LENGTH LATERALS, STANDARD

5.2.3 TENSION ADJUSTABLE BACK WITH RIGID, HEIGHT ADJUSTABLE FULL-LENGTH LATERALS, TALL

Size range:

Table 8: Tension Adjustable Backrest with Rigid, Height adjustable full-length laterals, Size Ranges

Size (width)	**Short back height**	**Standard back height**	**Tall back height**
51 cm (20") (cover range 48 cm (19”) to 51 cm (20"))	30 cm	42 cm	50 cm
46 cm (18") (cover range 43 cm (17”) to 46 cm (18"))	30 cm	42 cm	50 cm
41 cm (16") (cover range 38 cm (15") to 41 cm (16"))	30 cm	42 cm	50 cm
36 cm (14")	30 cm	42 cm	50 cm
30 cm (12”) 40cm seat length	30 cm	42 cm	50 cm
30 cm (12”) 30 cm seat length	Nil	30 cm	42 cm

Components and description:

- Include attachments to fit back system to wheelchair. If attachment is not size adjustable (universal bracket), is to be supplied with additional brackets or sleeve / filler to allow fitting onto narrower inner section of height adjustable back posts with range 19-22mm. This implies that 2 sets of each size should be provided in case if brackets which are not size adjustable.
- Design of bracket to allow fitting below to bend in back post or push handle with no interference during removal and placement.
- Quick-release mechanism allows for back to detach from wheelchair for transport.
- 3-piece tension adjustable backrest.
- 2x side panels with height adjustable full length rigid lateral supports. One panel to be fitted with straps the other with metal buckles.
- Trunk side supports should be lightweight, easy to bend and mould and height adjustable. Allows for contouring to fit body shape

Material:

- Separate covers are removable, washable heavy-duty lycra (220 g/m² and yield 3.4m/kg) with hook and loop attachments.

Straps:

- Maximum 25mm wide straps close and evenly spaced and not further apart than 20mm with steel sliders and hook and loop fastenings; Must be able to conform to body contours when adjusted; Straps allow for minimum of 100mm adjustment.

Fitting brackets

- Set of fitting brackets for 19mm back post
- Set of fitting brackets for 22mm back post

5.3 RIGID ADJUSTABLE BACK WITH FULL LENGTH LATERAL SUPPORT

Integrated trunk and pelvis side support

5.3.1 RIGID ADJUSTABLE BACK WITH FULL LENGTH INTEGRATED TRUNK AND PELVIS SIDE SUPPORT, MID THORACIC HEIGHT

5.3.2 RIGID ADJUSTABLE BACK WITH FULL LENGTH INTEGRATED TRUNK AND PELVIS SIDE SUPPORT, UPPER THORACIC HEIGHT

5.3.3 RIGID ADJUSTABLE BACK WITH FULL LENGTH INTEGRATED TRUNK AND PELVIS SIDE SUPPORT, SHOULDER HEIGHT

Size range (+- 1 cm)

Table 9: Rigid Adjustable Back with full length laterals, Mid-Thoracic Height Measurements

Mid thoracic: To fit to mid thoracic height on patient					
Size of back (measured from outside to outside of trunk side supports)	**Adjustability to fit range of trunk size**	**Back height**	**Height and depth of trunk side support**		
Fits wheelchair of same size			**Height of side support**	**Depth: Standard**	**Depth: Deep**
Paediatric					
10”	17.5 cm - 22.5cm (7”-9”)	24cm	16cm	15cm	
12”	22.5 cm - 27.5cm (9’-11”)	24cm	16cm	15cm	
Adults					
12”	22.5 cm - 27.5cm (9”-11”)	30 cm	21 cm	15 cm	
14”	27.5 cm - 35.5cm (11”-13”)	34 cm	26 cm	15 cm	20 cm
16”	32.5 cm - 37.5cm (13’-15”)	34 cm	26 cm	15 cm	20 cm
18”	37.5 cm- 42.5cm (16’-18”)	34 cm	26 cm	15 cm	20 cm
20”	42.5 cm- 47.5cm (18’-20”)	34 cm	26 cm	15 cm	20 cm

Table 10: Rigid Adjustable Back with full length laterals, Upper Thoracic Height Measurements

Upper thoracic: To fit upper thoracic height on patient					
Size of back (measured from outside to outside of trunk side supports)	**Adjustability to fit range of trunk size**	**Back height**	**Height and depth of trunk side support**		
Fits wheelchair of same size			**Height of side support**	**Depth: Standard**	**Depth: Deep**
Paediatric					
8”	12.5 cm -17.5cm (5”-7”)	24 cm	16 cm	15 cm	
10”	17.5 cm - 22.5cm (7”-9”)	30 cm	21 cm	15 cm	
12”	22.5 cm - 27.5mm (9’-11”)	30 cm	21 cm	15 cm	
Adults					
12”	22.5 cm - 27.5cm (9’-11”)	44 cm	26 cm	15 cm	20 cm
14”	27.5 cm -32.5cm (11”-13”)	44 cm	30 cm	15 cm	20 cm
16”	32.5 cm -37.5cm (13’-15”)	44 cm	30 cm	15 cm	20 cm
18”	37.5 cm - 42.5cm (16’-18”)	44 cm	30 cm	15 cm	20 cm
20”	42.5-47.5cm (18’-20”)	44 cm	30 cm	15 cm	20cm

Table 11: Rigid Adjustable Back with full length laterals, Shoulder Height Measurements

Shoulder height: To fit shoulder height on patient					
Size of back (measured from outside to outside of trunk side supports)	**Adjustability to fit range of trunk size**	**Back height**	**Height and depth of trunk side support**		
Fits wheelchair of same size			**Height of side support**	**Depth: Standard**	**Depth: Deep**
Paediatric					
8”	12.5-17.5cm (5”-7”)	30 cm	21 cm		15 cm
10”	17.5-22.5cm (7”-9”)	34 cm	26 cm		15 cm
12”	22.5-27.5cm (9’-11”)	34 cm	26 cm		15 cm
Adults					
12”	22.5-27.5cm (9”-11”)	44 cm	30 cm	15 cm	20 cm
14”	27.5cm (11”-13”)	60 cm	39 cm	15 cm	20 cm
16”	32.5-37.5cm (13’-15”)	60 cm	39 cm	15 cm	20 cm
18”	37.5-42.5cm (16’-18”)	60 cm	39 cm	15 cm	20 cm
20”	42.5-47.5cm (18’-20”)	60 cm	39 cm	15 cm	20 cm

Components and description:

- Include attachments to fit back system to wheelchair. If attachment is not size adjustable (universal bracket), is to be supplied with sleeve / filler to allow fitting onto narrower inner section of height adjustable back posts with range 1.9cm-2.2cm.
- Quick-release mechanism allows for back to detach from wheelchair for transport.
- Back system fitting on back posts to be height adjustable and recline.
- Angle adjustable setting - maximum 15 degrees recline.
- Trunk side supports to allow width adjustment as per specified range
- Maximum thickness of trunk side supports = 1.5cm.
- Should allow build up and modifications to customise fit.
- Separate covers are removable, washable appropriate stretch fabric.

5.3. C **CUSTOMISING OPTIONS**

5.3. C.1 Set of fitting brackets for a second wheelchair

5.3. C.2 Set of fitting brackets for 19mm back post

5.3. C.3 Set of fitting brackets for 22mm back post

5.4 RIGID ADJUSTABLE BACK

5.4.1 RIGID ADJUSTABLE BACK, MID THORACIC HEIGHT. RANGE: 30CM-38CM
5.4.2 RIGID ADJUSTABLE BACK, UPPER THORACIC HEIGHT. RANGE: 42CM-50CM
5.4.3 RIGID ADJUSTABLE BACK, SHOULDER HEIGHT. RANGE: 53CM-61CM

Minimum of 3 back heights either as individual backrest or with an adjustability option.

Table 12: Rigid Adjustable Back Sizes

Size of back (measured from outside to outside of trunk side supports)
12”
14”
16”
18”

Components and description:

- Include attachments to fit back system to wheelchair. If attachment is not size adjustable (universal bracket), it is to be supplied with sleeve / filler to allow fitting onto narrower inner section of height adjustable back posts with range 1.9cm-2.5cm.
- Quick-release mechanism allows for back to detach from wheelchair for transport.
- Lightweight rigid adjustable back support with removable / swing-away / flip-up trunk side support.
- Back system fitting on back posts to be height adjustable and recline.
- Angle adjustable setting - maximum 15 degrees recline.
- Trunk side supports to allow width adjustment as per specified range.
- Maximum thickness of trunk side supports = 1.5cm.
- Should allow build up and modifications to customise fit.
- Separate covers are removable, washable appropriate stretch fabric.

5.4. C CUSTOMISING OPTIONS

5.4.C.1 Set of backrests mounting brackets to accommodate at least 19mm-22mm diameter back post for second wheelchair.

5.4.C.2 Pairs of side supports to support trunk and/ or pelvis. Side support assembly allows for both adjustment in horizontal and vertical planes to adjust for depth and height. End user to specify if one or two pairs are needed. Side support pad size (depth height). Back rest with one set of side support only.

10x10 : ± 1cm
10x12.5 : ± 1cm
10x15 : ± 1cm
15x10 : ± 1cm
15x12.5 : ± 1cm
15x15 : ± 1cm

5.4.C.3 Headrest with mounting bar to fit on backrest

- Easily removable
- Height and depth adjustable

5.5 ADJUSTABLE MODULAR BACK

Adjustable modular /solid back with individual flip up or swing away rigid trunk and or pelvis side support

5.5.1 RIGID MODULAR BACK, STANDARD HEIGHT
5.5.2 RIGID MODULAR BACK, TALL HEIGHT

Size range:

Table 13: Adjustable Modular Back Size Ranges

Size (width)	**Standard back height**	**Tall back height**	**Lateral depth**
46 cm (18") (cover range 43 cm (17") to 46 cm (18"))	43 – 53 cm	50 – 60 cm	Standard = 15 cm Deep = 18 cm straight or curved
41 cm (16") (cover range 38 cm (15") to 41 cm (16"))	43 – 53 cm	50 – 60 cm	Standard = 15 cm Deep = 18 cm straight or curved
36 cm (14")	43 – 53 cm	50 – 60 cm	Standard = 10 cm Deep = 15 cm straight or curved
30 cm (12") 40cm seat length	43 – 53 cm	50 – 60 cm	Standard = 10 cm Deep = 15 cm straight or curved
30 cm (12") 30 cm seat length	35 – 43 cm	43 – 53 cm	Standard = 10 cm Deep = 15 cm straight or curved

If no technical specification received with order, device will be issued with standard length supports with no curve.

Components and description:

- Adjustable in width, height and recline.
- Independent lumbar-sacral support adjustable in height and angle.
- Independent thoracic support adjustable in height.
- Independent lateral supports adjustable in height and width.
- Attachments to fit back system to range of wheelchair back posts with range 1.9cm-2.5cm.

Material:

- Back support sections: high density polyethylene (HDPE) moulded with sealed cell foam supports, which can be customised.
- Lateral support: HDPE moulded plastic with sealed cell foam supports which can be build up and customised – available in standard or optional long to accommodate extra body depth.
- Covers made from washable heavy-duty lycra (220 g/m² and yield 3.4m/kg) with hook and loop attachments.
- Frame: Mild steel passivated or stainless steel.
- Back system detachable for transport.

5.5. C **CUSTOMISING OPTIONS**

5.5. C.1 **Head support, basic adjustable**

- Minimum 2 sizes, small and standard
- Easily removable
- Height and depth adjustable
- Kidney shaped head support flexible and rake adjustable
- Padded and covered in heavy gauge, removable, washable fabric

5.5. C.2 **Head support, complex adjustable**

- Minimum 2 sizes, small and standard
- Easily removable
- Height and depth adjustable point, hand shaped head support, flexible and rake adjustable
- Moulded and padded EVA

5.5. C.3 Set of backrests mounting brackets to accommodate at least 19mm-22mm diameter back post for second wheelchair

5.6 LOW-COST MODULAR SEATING SYSTEM

Low-cost modular seating unit

Sizes:

Table 14: Low-Cost Modular Seating System Size Ranges

Seat size	Seat board	
	Width x Length (inch) *Minimum length*	Width x Length (cm) *Minimum length*
S	12” x 16”	29cm x 40cm
M	14” x 18”	34cm x 45cm
L	16” x 18”	39cm x 45cm
XL	18” x 18”	44cm x 45cm

Seat size	Backrest board	
	Width x Length (inch) *Minimum length*	Width x Length (cm) *Minimum length*
S	12” x 22”	29cm x 55cm
M	14” x 22”	34cm x 55cm
L	16” x 22”	39cm x 55cm
XL	18” x 22”	44cm x 55cm

Components:

- Seat assembly
- Backrest assembly
- Lateral pad assembly
- Straps assembly
- Tray table assembly
- Brackets
- Fasteners

A Seat assembly

One seat panel with components for basic layered foam cushion and cover. Components include chip foam base, thick enough or in layers to create pre-ischial shelf, high density top layer.

B Back assembly

One seat panel with back pad and pad cover

C. Lateral pad assembly

Six lateral support pads to be used as trunk supports, hip supports and abductor in any combination required. To fit child and adult wheelchair users.

D. Straps

1x lap strap assembly
1x chest strap assembly
2 x foot straps assembly

E. Tray table assembly

1x Tray table and 2 support assembly with attachment brackets to use on wheelchairs with no armrests

F. Brackets

Steel brackets ("L" brackets for the posture support device attachment to the back and seat boards.)

G. Fasteners

Bolts and washers, nuts etc. needed to secure lateral support to back and seat panels and seating system to wheelchair. Components for attachment to wheelchair by means of quick release system.

5.6. C CUSTOMISING OPTIONS

5.6. C.1 Attendant propelled wheeled base for low-cost seating system with:

- Minimum 90 degrees back to seat angle
- Tilt in space option
- Folding frame
-

5.6. C.2 Self-propelled wheeled base for low-cost seating system with:

- Minimum 90 degrees back to seat angle
- Tilt in space option
- Folding frame
-

5.6. C.3 Rear wheels to fit attendant propelled wheeled base

5.6. C.4 Rear wheels to fit self-propelled wheeled base

5.7 TRUNK SIDE SUPPORT

Sizes:

- 10 cm x10 cm ± 2 cm
- 10 cm x12.5 cm ±2 cm
- 10 cm x15 cm ± 2 cm
- 15 cm x10 cm ± 2 cm
- 15 cm x12.5 cm ±2 cm
- 18cm x 10cm ± 2cm
- 18 cm x 12 cm ± 2cm

Side support pad size (depth height)

Description:

- Pairs of side supports to support trunk by attaching directly onto the back post of the wheelchair.
- To be used in combination with a tension adjustable backrest.
- The assembly should allow horizontal adjustment to bring trunk pad closer to or further away from user.
- End user to specify size
- Side support assembly allows for both adjustments in horizontal and vertical planes to adjust for depth and height.
- End user to specify if one or two pairs needed.

Back rest mounting brackets:

- Set of backrests mounting brackets to accommodate at least 19mm -22mm diameter back post tubes.

5.8 BASE SEATING SYSTEMS

Pelvic straps for all wheelchairs (excluding posture wheelchairs and buggies)

5.8.1 Pelvic straps, basic adjustable, with D-ring fitting

- Poly-cotton webbing, first preference is Black, and alternative is Navy Blue, 5 cm wide. Two separate sections, one non-adjustable, other section adjustable. Non-adjustable section fitted with 5 cm D-ring (chromium plated, galvanised steel) and other with male and female hook and loop straps. Non-adjustable section to be 60 cm long. Adjustable section with hook and loop straps. To be 80 cm long. Hook strap 30 cm long on one end, with loop strap 30 cm long immediately adjacent to hook strap. 20 cm of belt not covered in strap.

5.8.2 Pelvic straps, basic adjustable, with D-ring fitting

- Poly-cotton webbing, first preference is Black, and alternative is Navy Blue, 3 cm wide. Two separate sections, one non-adjustable, other section adjustable. Non-adjustable section fitted with 3,8 cm D-ring (chromium plated, galvanised steel) and other with male and female hook and loop straps. Non-adjustable section to be 50 cm long. Adjustable section with hook and loop straps to be 56 cm long. Hook strap 8 cm long on one end, with loop strap 8 cm long immediately adjacent to hook strap. 40 cm of belt not covered in strap.

5.8.3 Pelvic straps, basic adjustable, with male-female plastic buckle system

- Poly-cotton webbing, first preference is Black, and alternative is Navy Blue, 5 cm wide. Two separate sections, one non-adjustable, other section adjustable. Non-adjustable section fitted with female end of buckle. Non-adjustable section to be 60 cm long. Adjustable section to be fitted with male buckle and to be 80 cm long.

5.8.4 Pelvic straps, padded adjustable

- Poly-cotton webbing, first preference is Black, and alternative is Navy Blue, 5 cm wide. Two separate sections, one non-adjustable, other section adjustable. Non-adjustable section fitted with 5 cm D-ring (chromium plated, galvanised steel) and other with male and female hook and loop straps. Non-adjustable section to be 60 cm long. Adjustable section with hook and loop straps to be 8 cm long. Hook strap 30 cm long on one end, with loop strap 30 cm long immediately adjacent to hook strap. 20 cm of belt not covered in hook and loop straps. Padding (EVA 45) attached to D-ring section, 6 cm wide, 50 cm long of which half extending beyond the D-ring. The padded section to be covered with sleeve to prevent damage / tearing of the EVA 45 pad.

5.9 POSTURE SUPPORT SEAT SYSTEM

For use in transporting child in vehicle

Size range of seat system:

The sizes below are maximum usable measurements of complete seating back supports and cushions. Variances of +- 2 cm allowed

- Seat width 30 cm, depth 31 cm, height 50 cm
- Seat width 35 cm, depth 36 cm, height 60 cm
- Seat width 40 cm, depth 41 cm, height 70 cm
- Seat width 40 cm, depth 45 cm, height 80 cm

General requirements:

- No part or component may be changed to deviate from the technical specifications set out in this document.
- Bidder to submit accredited test report to ensure device durability
- The seating system must be used in conjunction with a standard vehicle seat belt system. The design therefore must be such that it allows for safe and secure use of standard vehicle seat belt system.
- System will be removable from vehicle by way of a strapping attachment system

Seat support frame technical specifications:

- Seat and back unit will be 2 separate units which can be set up independently of each other to fit the user's individual technical specifications
- Rigid outer made from fiberglass or similar strength material such as Polyethylene board
- Both seat and back units should have rigid outer
- Design must allow for supported tilt in space of 20 degrees while maintaining 90-degree hip flexion

Back unit:

- Foam contour moulded back support (see technical specifications under seat system foam)
- Contoured lateral trunk and pelvic supports to ensure maximum postural support, but not restrict upper limb function and movement
- Thoracic and pelvic posterior support moulded to allow for postural support in neutral alignment
- Integrated chest strap – see postural support straps

Head:

- Head support unit
- Position adjustable
- Moulded to allow for lateral head support
- Lateral head support should not restrict vision

Seat unit:

- Contoured sitting surface with build in pre-ischial, adduction and abduction support (see technical specifications under seat system foam).
- High density foam pressure relieving cushion.
- Integrated pelvic strap – see postural support straps
-

POSTURAL SUPPORT STRAPS

Chest strap

- 10 cm wide adjustable non-stretch strap
- Release system should be made inaccessible to user by means of a protective sleeve

Lap belt Support

- 5 cm wide adjustable non-stretch strap
- Release system should be made inaccessible to user by means of a protective sleeve

Seat system foam:

- At least 2 layers

Top layer for postural support and pressure relief:

- High-density foam 30/20; Hardness factor 18 – 21.6; Density range 27.1 - 32 kg/m³

Base layer:

- High density chip foam (reconstituted flexible PU) foam SC 960; Hardness factor 38 - 60; Density 96+10% kg/m³ (SANS 642 - 1976)

Attachment system to secure seat to vehicle:

- Attachment system should separately secure the back and seat units to the vehicle seat and prevent sliding or movement in any direction

END OF CATEGORY 5

6 CATEGORY 6 : TRAY TABLES

6.1. TRAY TABLE, BASIC WOOD

Table to fit both basic and adjustable folding frame wheelchairs

Size range:

- To fit wheelchair 61 cm (24") wide (Total dimensions = 70±3 cm x 70±3 cm)
- To fit wheelchair 56 cm (22") wide (Total dimensions = 65±3 cm x 65±3 cm)
- To fit wheelchair 51 cm (20") wide (Total dimensions = 60±3 cm x 60±3 cm)
- To fit wheelchair 46 cm (18") wide (Total dimensions = 55±3 cm x 55±3 cm)
- To fit wheelchair 41 cm (16") wide (Total dimensions = 50±3 cm x 50±3 cm)
- To fit wheelchair 36 cm (14") wide (Total dimensions = 45±3 cm x 45±3 cm)
- To fit wheelchair 30 cm (12") wide with 40 cm seat frame length (Total dimensions = 40±3 cm x 40±3 cm)
- To fit wheelchair 30 cm (12") wide with 30 cm seat frame length (Total dimensions = 35±3 cm x 35±3 cm)
- To fit wheelchair 25 cm (10") wide with 30 cm seat frame length (Total dimensions = 35±3 cm x 35±3 cm)

Description:

- When attached, the extensions around the body should be long enough to reach to the back posts. This will ensure that the elbows are fully supported whilst in the upright sitting position.
- When attached, the curve around the body should be such to prevent openings between the body and the tray where the elbows, forearms or hands can slip into.

Thickness:

- Between 0.9cm and 1.5 cm

Material:

- Wood with sealer and wood varnish

Quality:

- Smooth, washable, splinter free surface, splinter proof, rounded edges, easily wipe-able and cleanable

Attachment:

- To attach with hook and loop straps around the armrest of wheelchair
- If the tray has a hook ad loop straps section for attachment, the hook ad loop straps should be of soft (loop) type.

6.1. C CUSTOMISING OPTIONS FOR TRAY TABLE BASIC WOOD

6.1.C.1 non-slip vinyl top

6.1.C.2 padded top and with non-slip vinyl covering

6.2 TRAY TABLE, BASIC PLASTIC

Table to fit both basic and adjustable folding frame wheelchairs

Size range:

- To fit wheelchair 61 cm (24") wide (Total dimensions = 70±3 cm x 70±3 cm)
- To fit wheelchair 56 cm (22") wide (Total dimensions = 65±3 cm x 65±3 cm)
- To fit wheelchair 51 cm (20") wide (Total dimensions = 60±3 cm x 60±3 cm)
- To fit wheelchair 46 cm (18") wide (Total dimensions = 55±3 cm x 55±3 cm)
- To fit wheelchair 41 cm (16") wide (Total dimensions = 50±3 cm x 50±3 cm)
- To fit wheelchair 36 cm (14") wide (Total dimensions = 45±3 cm x 45±3 cm)
- To fit wheelchair 30 cm (12") wide with 40 cm seat frame length (Total dimensions = 40±3 cm x 40±3 cm)
- To fit wheelchair 30 cm (12") wide with 30 cm seat frame length (Total dimensions = 35±3 cm x 35±3 cm)
- To fit wheelchair 25 cm (10") wide with 30 cm seat frame length (Total dimensions = 35±3 cm x 35±3 cm)

Description:

- When attached, the extensions around the body should be long enough to reach to the back posts. This will ensure that the elbows are fully supported whilst in the upright sitting position.
- When attached, the curve around the body should be such to prevent openings between the body and the tray where the elbows, forearms or hands can slip into.

Material:

- Clear, see-through durable plastic

Thickness:

- Between 0.9cm and 1.5 cm

Quality:

- Smooth, washable, splinter free surface, splinter proof, rounded edges, easily wipe-able and cleanable

Attachment:

- To attach with hook and loop straps around the armrest of wheelchair
- If the tray has a hook ad loop straps section for attachment, the hook and loop straps should be of soft (loop) type.

6.2. C CUSTOMISING OPTIONS FOR TRAY TABLE PLASTIC

6.2.C.1 non-slip vinyl top

6.2.C.2 padded top and with non-slip vinyl covering

END OF CATEGORY 6

7. CATEGORY 7 : POSITIONERS

7.1 SIDELYERS

Type:

- Side positioner consisting of fully adjustable body support
- To support body in alternate side lying position while stabilizing head, trunk, and pelvis. Legs to be accommodated in opposing flexor and extending postures.
- Provide mattress with back support angles at 90 degrees to lying surface.

Size range: (All measurements have a tolerance of ± 10 cm)

- Extra small 100 cm long x 60 cm wide, Back height 35 cm (Back height measured from top of lying support)
- Small 120 long cm x 60 wide cm, Back height 35cm (Back height measured from top of lying support)
- Medium 150 long cm x 60 wide cm, Back height 45cm (Back height measured from top of lying support)
- Large 180 long cm x 70 wide cm, Back height 50cm (Back height measured from top of lying support)

Frame:

- Folding frame with webbing, hook, and loop straps attachments
- Folding frame to be made from either metal or wood (these are options)
- Mattress support should be made from metal strips or webbing or wooden slats

Foam supports:

- High density foam (26/20) Density range 24.1 – 27 Kg/m³ and harness factor 18.0 – 21.6, except head support cushion high density foam (30/9) with density range 27,1 – 32 kg/m³ and hardness factor 7.2 – 10.8.
- Removable washable cotton twill
- Lying surfaces covered with waterproof stretch terry cloth cotton covers, 2-way stretch, breathable, anti-microbial shield treated,
- Both fabrics machine washable and can be dried in tumble drier,
- Fabric with hook and loop straps for adjustments
- 1 x integrated back and base support
- 2 x leg supports (base and small positioning block) Block sizes appropriate to fully support thigh, lower leg, and foot of the user in lying
- 1x trunk support with waterproof cover
- 1 x head support with waterproof cover

Positioning Blocks Adjustment ranges:

- Chest Block with depth adjustment appropriate to the size (extra-small, small, medium and large)
- Pelvic Block with depth adjustment appropriate to the size (extra-small, small, medium, and large)
- Knee Block with depth adjustment appropriate to the size (extra-small, small, medium, and large)

Positioning Blocks sizes:

- 1x Chest Block Size for extra-small, small, medium, and large
- 1x Pelvic Block size for extra-small, small, medium, and large
- 1x Knee Block size for extra-small, small, medium, and large
- 1 x head support for extra-small, small, medium, and large

Covers:

- All covers removable for machine washing

7.2 PRONE WEDGES

Type:

- Prone wedge with pelvic support and abduction pommel
- To support body in prone lying while stabilizing the pelvis. Legs to be accommodated in abduction.

Size range: (Tolerance ± 1 cm)

- Extra Small: length 50 cm x width 60 cm x 10 cm front height x 4 cm back height
- Small: length 70 cm x width 60 cm x 15 cm front height x 6 cm back height
- Medium: length 90 cm x width 60 cm x 20 cm front height x 8 cm back height
- Large: length 110 cm x width 70 cm x 25 cm front height x 10 cm back height

Abduction blocks:

- 3 cm front x 8 cm back x 16 cm long x 15 cm high
- 6 cm front x 11 cm x 16 cm long x 15 cm high
- 7 cm front x 13 cm x 16 cm long x 15 cm high
- 7.5 cm front x 15 cm x 20 cm long x 15 cm high

Pelvic stabilisation:

- Pelvic strap 10 cm wide webbing strap with hook and loop straps attachments for extra small, small and medium
- Pelvic strap 15 cm wide webbing strap with hook and loop straps attachments for large
- Sandbag: 1.5 kg, 2 kg, 2.5 kg and 3 kg divided into three sections in relation to wedge size.

Foam supports:

- Prone wedge and abduction block: high density compressed (reconstituted flexible PU) foam 960; Hardness factor 38 - 60; Density 96±10% kg/m³. (SANS 642 – 1976).

Cover:

- Vinyl with zip or hand-closed

7.3 STANDING FRAMES

7.3.1 POSITIONER – UPRIGHT STANDING FRAMES

7.3.1.1 UPRIGHT STANDING FRAME

Type:

- Adjustable upright standing support
- Full trunk support
- Upright posture support. Lower limb, pelvis, trunk, and head support (optional)
- Allow age-appropriate abduction of hips
- Allow age-appropriate hip and knee extension (this means a degree of flexion for certain ages)

Size range (variance ± 5 cm):

- Extra small: Heel to Head 65cm-100cm ;Hip width maximum 30cm
- Small: Heel to head 85cm-120cm ;Hip width maximum 30cm
- Medium: Heel to head 100cm-135cm;Hip width maximum 35cm
- Large: Heel to head 135cm-160cm;Hip width maximum 40cm

Pelvic support

- Pelvic support adjustable, height and tension

Knee support:

- To provide support under patella (patella should be free). Support height adjustable and adequately padded.

Foot support:

- Forward and backward adjustability and age-appropriate abduction and lateral rotation

Trunk side support:

- Design of standing frame should provide adequate trunk side support.

Lap tray/ worktable:

- A multi-purpose tray / worktable that provides a stable surface for upper limb support. The surface extensions should provide support for the elbows, the curve around the body should be cut in such a way to prevent a large opening between the body and the tray where the elbows, forearms or hands can slip through.
- Height, depth, and angle adjustable independently from tilt in space
- **Thickness:** Between 0.6 cm and 1.5 cm
- **Material:** Wood (Supawood covered/protected with sealer and wood varnish)/ plastic with washable vinyl top
- **Quality:** Smooth, washable, splinter free surface, splinter proof, rounded edges, easily wipe-able and cleanable

7.3.1.2 UPRIGHT STANDING FRAME – ADULT

Type:

- Adjustable upright standing support
- Full trunk support
- Upright posture support. Lower limb, pelvis, trunk
- Allow age-appropriate abduction of hips
- Allow age-appropriate hip and knee extension (this means a degree of flexion for certain ages)

Size range (variance ± 5 cm):

- 78cm width, 84cm depth, height adjustable from 102 -122 cm

Pelvic support

- Pelvic support adjustable, height and tension

Knee support:

- To provide support under patella (patella should be free). Support height adjustable and adequately padded.

Trunk side support:

- Design of standing frame should provide adequate trunk side support.

Lap tray/ worktable:

- When attached, the curve around the body should be cut in such a way to prevent a large opening between the body and the tray where the elbows, forearms or hands can slip through.

Material:

- Wood (Supawood covered/protected with sealer and wood varnish)/ plastic with washable vinyl top

Quality:

- Smooth, washable, splinter free surface, splinter proof, rounded edges, easily wipe-able and cleanable

7.3.2 POSITIONER – PRONE STANDING FRAME, ADJUSTABLE FORWARD TILT TO PRONE 30 DEGREES

Type:

- Adjustable prone standing support
- Adjustable forward tilt to prone minimum 30 degrees
- Adjustable supine standing support- backward tilt to supine minimum 30 degrees
- Should be able to tilt to horizontal for ease of transfer of patients in/out of frame
- Upright posture support. Lower limb, pelvis, trunk
- Allow age-appropriate abduction of hips
- Allow age-appropriate hip and knee extension (this means a degree of flexion for certain ages)

Size range (variance ± 5 cm):

- Extra small: Heel to Head 65cm-100cm ;Hip width maximum 30cm
- Small: Heel to head 85cm-120cm ;Hip width maximum 30cm
- Medium: Heel to head 100cm-135cm;Hip width maximum 35cm
- Large: Heel to head 135cm-160cm;Hip width maximum 40cm

Tilt: Variable (mechanical /Pneumatic/hydraulic) and can be set at minimum 30 degrees Needs appropriate back up safety locking system

Pelvic support: Pelvic support, adjustable, height and tension

Knee support:

- To provide support under patella (patella should be free). Support height adjustable and adequately padded.

Foot support

- Forward and backward adjustability and age-appropriate abduction and lateral rotation

Trunk side support:

- Design of standing frame should provide adequate trunk side support.

Castors:

- Lockable castors should be robust to allow for pushing over uneven surfaces /outside. Minimum size 5cm diameter, 2cm width

Lap tray/ worktable:

- Easily removable (user should be able to fit and remove table by themselves), multi-purpose tray and provides stable surface. When attached, the surface extensions should provide support for the elbows but be sufficiently narrow not to inhibit self-propelling
- Table to remain horizontal, independent of the tilt of the frame, dependent on tilt to 180 to assist with transfers in a horizontal position.

- When attached, the curve around the body should be cut in such a way to prevent a large opening between the body and the tray where the elbows, forearms or hands can slip through
- Height, depth, and angle adjustable independently from tilt in space

Thickness: Between 0.6 cm and 1.5 cm

Material:

- Wood (Supawood covered/protected with sealer and wood varnish)/ plastic with washable vinyl top

Quality:

- Smooth, washable, splinter free surface, splinter proof, rounded edges, easily wipe-able and cleanable

END OF CATEGORY 7